苏州工业园区天地链条有限公司
S.I.P TIANDI CHAIN Co.,Ltd

苏州市格雷特链传动有限公司
SUZHOU GREAT CHAIN TRANSMISSION Co.,Ltd

输送链专业制造商

since 2004

2019

TIANDI CHAIN

GREAT CHAIN

苏州天地链条

TIANDI CHAIN

TIANDI CHAIN

GREAT CHAIN

格雷特链传动

GREAT CHAIN

苏州天地链条

TIANDI CHAIN

品质卓越　诚信经营

HIGH QUALITY INTEGRITY MANAGEMENT

格雷特链传动

GREAT CHAIN

天地链条
TD CHAIN

公司简介

苏州天地链条 坐落于历史名城苏州、太湖之畔，占地面积8000㎡，现有员工70余人，历经20多年的发展，已成为一家包含输送链、传动链、链轮、齿轮等多种传动产品的专业先进型制造企业。公司致力于研发生产A\B系列短节距精密滚子链、套筒链、摩托车链条、空心销轴链、U型盖板链、橡胶链、倍速链、板式链等超过2千多种输送链，并广泛应用于农机、汽车、轻工、自动化流水线、电子产业、医药化工、纺织工业、重工、输送等行业。

公司拥有强大的生产装配等技术实力和专业技术人才，并于2016年成立“苏州市格雷特链传动有限公司”，为出口业务提供更精准专业的服务，先后服务于欧美、东南亚、非洲、俄罗斯等几十个国家和市场。

产品研发、图纸设计、先进的链板冲制、销轴剪裁、轴套卷制、转炉热处理、滚筒抛光、标准链自动装配线、倍速链自动装配线、空心链自动装配线、非标产品手工装配、零件检测，产品检测，完成了产品制造的全部过程。

坚持“以质为本、用户至上、信誉第一”的宗旨。

你的要求，就是我们的标准。

Company Brief

Suzhou Tiandi Chain is located in the historical city of Suzhou, on the Bank of Taihu Lake.It is occupied 8,000 ㎡,with more than 70 employees.With more than 20 years of development, it has become a professional advanced manufacturer of conveyor chains, roller chains, sprockets, gears and other transmission products.We are committed to A&B series short pitch precision roller chains, steel bush chains, motorcycle chains, hollow pin chains, U-type attachment chains, rubber chains, double plus chains, leaf chains and more than 2,000 kinds of conveyor chains,and widely used in agricultural machinery, automobiles, light industry, automation pipeline, electronic industry, pharmaceutical and chemical industry, textile industry, heavy industry, conveyor and other industries.

We have strong assembly technology and professional technical personnel, and in 2016 established "Suzhou Great Transmission." to provide more accurate professional services for export business, have served in Europe ,the United States, Southeast Asia, Africa, Russia and other dozens of countries and markets.

Product development, drawing design, advanced plate punching, pin tailoring, bush rolling, converter heat treatment, polishing, standard chain automatic assembly line, double plus chain automatic assembly line, hollow pin chain automatic assembly line, manual assemblyof non-standard products,parts testing, product testing, completed the entire process of product manufacturing.

Adhere to the purpose of "quality-oriented, user-oriented, reputation first".

Your request is our standard.

金相显微镜
Metalloscope

邵氏（橡胶）硬度计
Shore(Rubber) hardness tester

洛氏硬度计
Rockwell hardness tester

维氏硬度计
Vickers hardness tester

数显链条测量仪
Instrument for measuring chain length

液压万能试验机
Hydraulic universal material test machine

链条结构及部件
construction and component parts

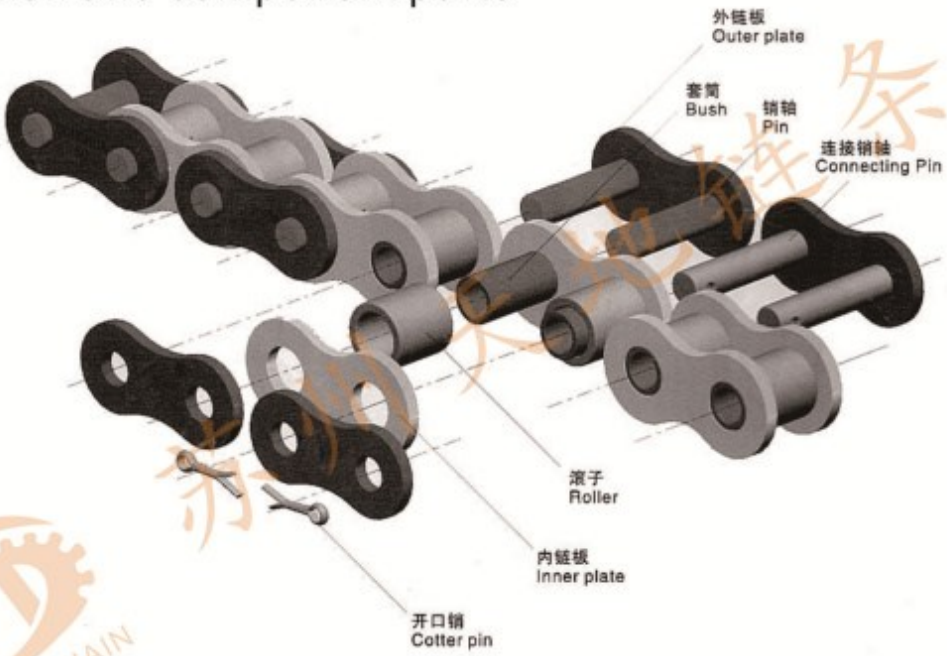

内链节
Inner link

外链节
Outer link

普通卡簧型链扣
Connecting link with open springclip

半封闭卡簧型链扣
Connecting link with half-close spring clip

全封闭卡簧型链扣
Connecting link with close spring clip

钢丝锁销型链扣
Connecting link with solid long cotter

开口销型链扣
Connecting link with cotter

过渡链扣(半扣)
Offset link

复合过渡链扣
Double offset link

天地链条
TD CHAIN

目 录

短节距精密滚子链
Short pitch precision roller chains 1-8

加重系列滚子链
Heavy duty series roller chains 9

开口销滚子链
Cottered type short pitch precision roller chains 10

其他滚子链
Other roller chains 11

自润滑链
Self-lubrication roller chains 12

钢制套筒链
Steel bush chains 13-14

双节距链
Double pitch chains 15-16

摩托链及发动机链
Motorcycle driving chains and engine timing chains 17-18

齿型链
Silent chains 19-20

空心链
Hollow pin chains 22-24

弯板链（热合机链 P36）
Conveyor chains with attachments 25-36

长销链（挡板链P41）
Conveyor chains with extended pins 37-41

开窗机链
Anti-sidebow chains for pushing window 42

滚轮链 Conveyor chains with rollers

侧滚轮链
Conveyor chains with outboard rollers 44-48

顶滚轮链
Conveyor chains with top rollers 49-52

倍速链
Double plus chains 53-57

边滚轮链
Conveyor chains with side rollers 58

U型盖板链
Roller chains with U type attachments 59-64

Catalogue

橡胶链
Roller chains with vulcanized elastomer profiles 65-80

板式链
Leaf chains 81-84

管子钳链
Pipe clamp chains 85

侧弯链及附件
Side bow chains and the attachments 86-88

电阻链
Resistor chains 89

尖齿链
Sharp top chains 90-97

尼龙链
Plastic chains 98

拖板链
Articulated bottomplate chains 99-100

无极变速链
Self-tooth-forming chains 101

推盒链
Pushing box chains 102

重载弯板链
Heavy duty cranked-link chains 103

钢制方框易拆链
Steel detachable chains 104

农机链
Agricultural chains 105-108

M系列输送链
Conveyor chains (M series) 109

带附件输送链
Conveyor chains with attachments ..... 110 -119

短节距精密滚子链（A系列单排）
Short pitch precision roller chains (A series simplex)

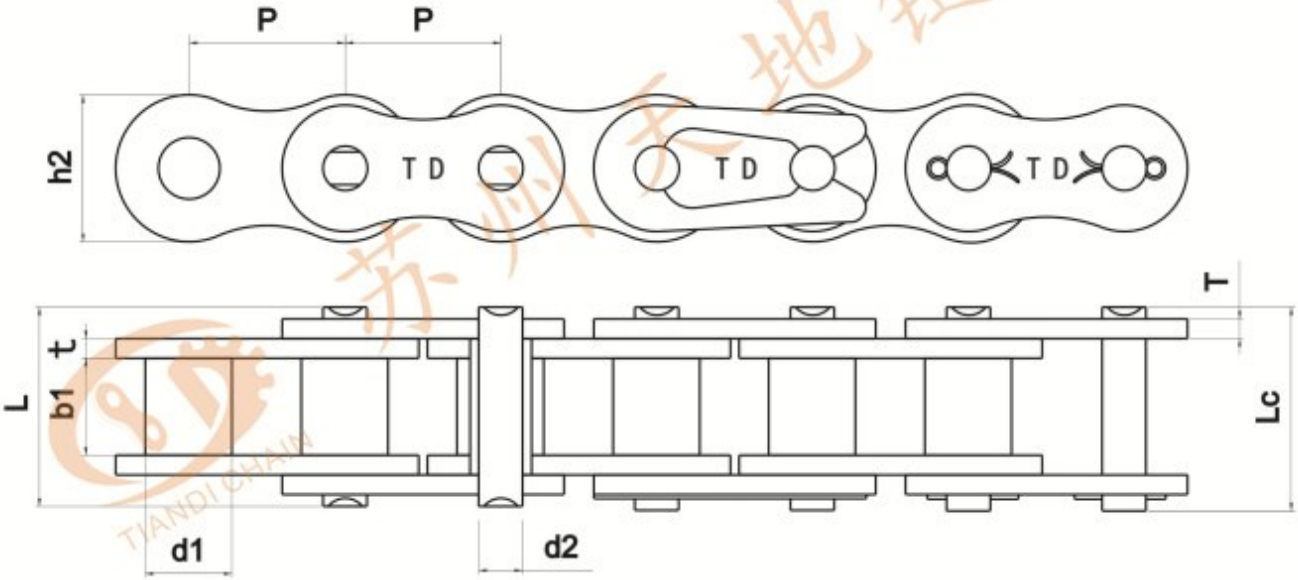

接头CL

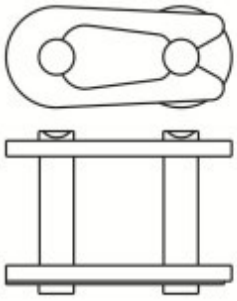

半接头OL

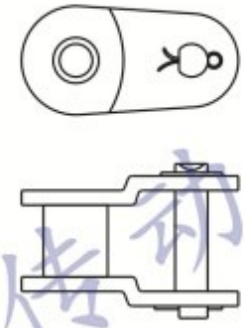

型号	天地链号	节距 Pitch	滚柱直径 Roller diameter	内节内宽 Width between inner plates	销轴直径 Pin diameter	销轴长度 Pin length		内片宽度 Inner plate depth	链板厚度 Plate thickness	排距 Transverse pitch	极限抗拉强度 Ultimate tensile strength	平均抗拉强度 Average tensile strength	每米重量 Weight per meter
Chain No.	Chain No.	P	d1 max	b1 min	d2 max	L max	Lc max	h2 max	t/T max	Pt	Q min	Q0	q
		mm	mm	mm	mm	mm	mm	mm	mm	mm	kN/Ibf	kN	kg/m
10		3.175	1.7	1.6	1.16	4.45	–	2.9	0.5	–	1.2	1.3	0.039
15	03C-1	4.7625	2.48	2.38	1.62	6.1	6.9	4.3	0.6	–	1.8/409	2	0.089
25	04C-1	6.35	3.3	3.18	2.31	7.9	8.4	6	0.8	–	3.5/795	4.6	0.15
35	06C-1	9.525	5.08	4.77	3.58	12.4	13.17	9	1.3	–	7.9/1795	10.8	0.33
40	08A-1	12.7	7.95	7.85	3.96	16.6	17.8	12	1.5	–	14.1/3205	17.5	0.62
50	10A-1	15.875	10.16	9.4	5.08	20.7	22.2	15.09	2.03	–	22.2/5045	29.4	1.02
60	12A-1	19.05	11.91	12.57	5.94	25.9	27.7	18	2.42	–	31.8/7227	41.5	1.5
80	16A-1	25.4	15.88	15.75	7.92	32.7	35	24	3.25	–	56.7/12886	69.4	2.6
100	20A-1	31.75	19.05	18.9	9.53	40.4	44.7	30	4	–	88.5/20114	109.2	3.91
120	24A-1	38.1	22.23	25.22	11.1	50.3	54.3	35.7	4.8	–	127/28864	156.3	5.62
140	28A-1	44.45	25.4	25.22	12.7	54.4	59	41	5.6	–	172.4/39182	212	7.5
160	32A-1	50.8	28.58	31.55	14.27	64.8	69.6	47.8	6.4	–	226.8/51545	278.9	10.1
180	36A-1	57.15	35.71	35.48	17.46	72.8	78.6	53.6	7.2	–	280.2/63682	341.8	13.45
200	40A-1	63.5	39.68	37.85	19.85	80.3	87.2	60	8	–	353.8/80409	431.6	16.15
240	48A-1	76.2	47.63	47.35	23.81	95.5	103	72.39	9.5	–	510.3/115977	622.5	23.2

短节距精密滚子链(A系列双排)
Short pitch precision roller chains (A series duplex)

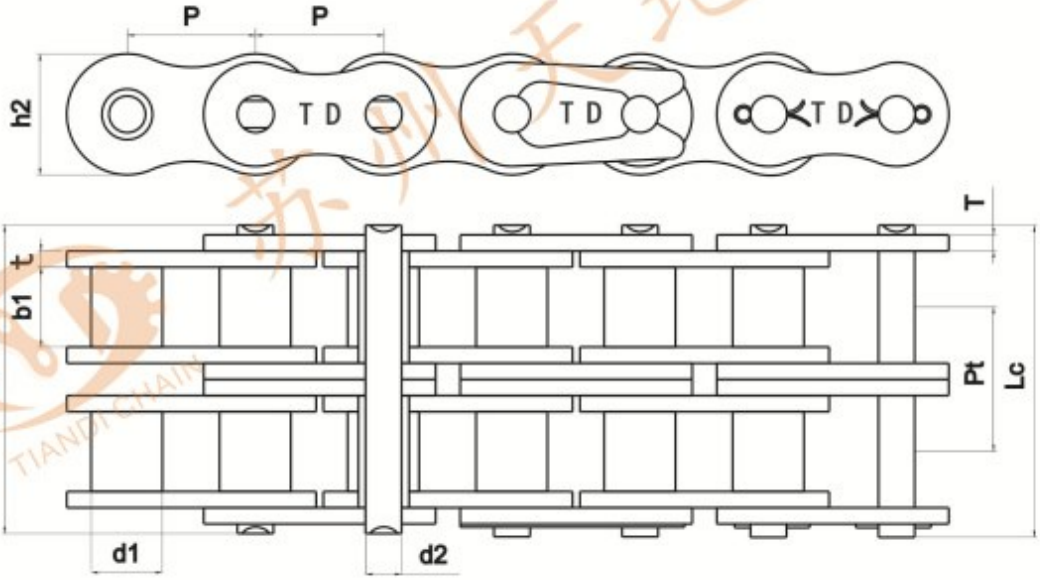

接头CL

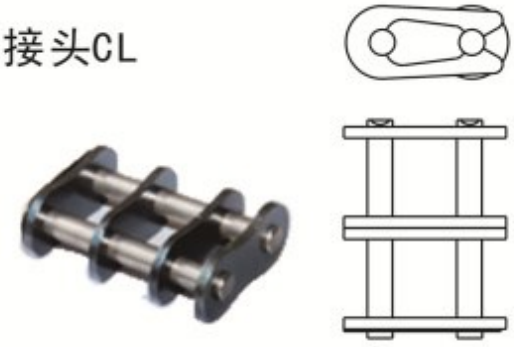

半接头OL

型号	天地链号	节距 Pitch	滚柱直径 Roller diameter	内节内宽 Width between inner plates	销轴直径 Pin diameter	销轴长度 Pin length		内片宽度 Inner plate depth	链板厚度 Plate thickness	排距 Transverse pitch	极限抗拉强度 Ultimate tensile strength	平均抗拉强度 Average tensile strength	每米重量 Weight per meter
Chain No.	Chain No.	P	d1 max	b1 min	d2 max	L max	Lc max	h2 max	t/T max	Pt	Q min	Q0	q
		mm	mm	mm	mm	mm	mm	mm	mm	mm	kN/lbf	kN	kg/m
25-2	04C-2	6.35	3.3	3.18	2.31	14.5	15	6	0.8	6.4	7/1591	8.6	0.28
35-2	06C-2	9.525	5.08	4.77	3.58	22.5	23.3	9	1.3	10.13	15.8/3591	19.7	0.63
40-2	08A-2	12.7	7.95	7.85	3.96	31	32.2	12	1.5	14.38	28.2/6409	35.9	1.12
50-2	10A-2	15.875	10.16	9.4	5.08	38.9	40.4	15.09	2.03	18.11	44.4/10091	58.1	2
60-2	12A-2	19.05	11.91	12.57	5.94	48.8	50.5	18	2.42	22.78	63.6/14455	82.1	2.92
80-2	16A-2	25.4	15.88	15.75	7.92	62.7	64.3	24	3.25	29.29	113.4/25773	141.8	5.15
100-2	20A-2	31.75	19.05	18.9	9.53	76.4	80.5	30	4	35.76	177/40227	219.4	7.8
120-2	24A-2	38.1	22.23	25.22	11.1	95.8	99.7	35.7	4.8	45.44	254/57727	314.9	11.7
140-2	28A-2	44.45	25.4	25.22	12.7	103.3	107.9	41	5.6	48.87	344.8/78364	427.5	15.14
160-2	32A-2	50.8	28.58	31.55	14.27	123.3	128.1	47.8	6.4	58.55	453.6/103091	562.4	20.14
180-2	36A-2	57.15	35.71	35.48	17.46	138.6	144.4	53.6	7.2	65.84	560.5/127386	695	29.22
200-2	40A-2	63.5	39.68	37.85	19.85	151.9	158.8	60	8	71.55	707.6/160818	877.4	32.24
240-2	48A-2	76.2	47.63	47.35	23.81	183.4	190.8	72.39	9.5	87.83	1020.6/213955	1255.3	45.23

短节距精密滚子链（A系列三排）
Short pitch precision roller chains (A series triplex)

接头CL

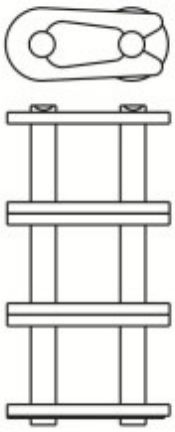

半接头OL

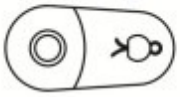

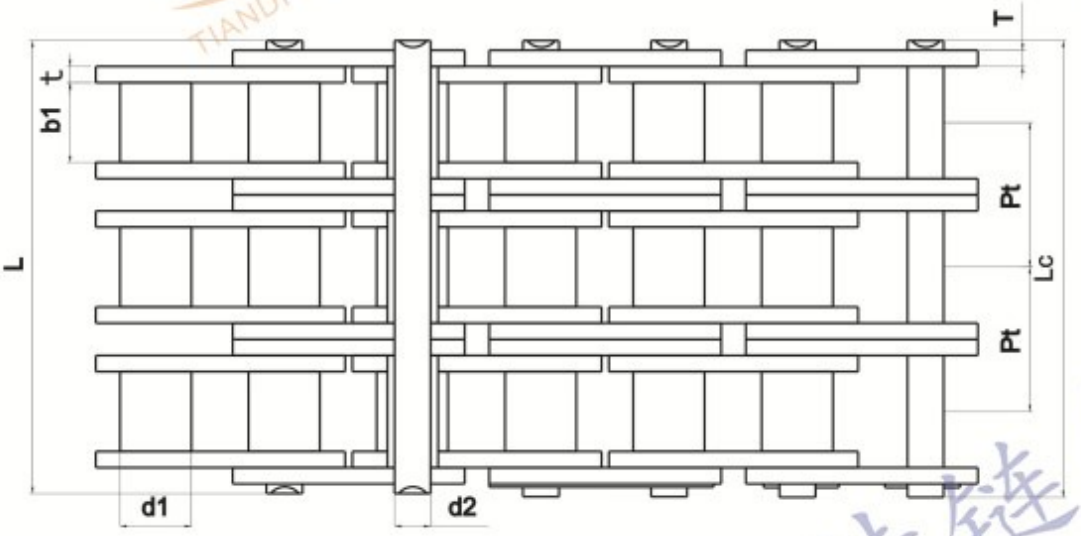

型号	天地链号	节距 Pitch	滚柱直径 Roller diameter	内节内宽 Width between inner plates	销轴直径 Pin diameter	销轴长度 Pin length		内片宽度 Inner plate depth	链板厚度 Plate thickness	排距 Transverse pitch	极限抗拉强度 Ultimate tensile strength	平均抗拉强度 Average tensile strength	每米重量 Weight per meter
Chain No.	Chain No.	P	d1 max	b1 min	d2 max	L max	Lc max	h2 max	t/T max	Pt	Q min	Q0	q
		mm	mm	mm	mm	mm	mm	mm	mm	mm	kN/Ibf	kN	kg/m
25-3	04C-3	6.35	3.3	3.18	2.31	21	21.5	6	0.8	6.4	10.5/2386	12.6	0.44
35-3	06C-3	9.525	5.08	4.77	3.58	32.7	33.5	9	1.3	10.13	23.7/5386	28.6	1.05
40-3	08A-3	12.7	7.95	7.85	3.96	45.4	46.6	12	1.5	14.38	42.3/9614	50	1.9
50-3	10A-3	15.875	10.16	9.4	5.08	57	58.5	15.09	2.03	18.11	66.6/15136	77.8	3.09
60-3	12A-3	19.05	11.91	12.57	5.94	71.5	73.3	18	2.42	22.78	95.4/21682	111.1	4.54
80-3	16A-3	25.4	15.88	15.75	7.92	91.7	93.6	24	3.25	29.29	170.1/38659	198.4	7.89
100-3	20A-3	31.75	19.05	18.9	9.53	112.2	116.3	30	4	35.76	265.5/60341	309.6	11.77
120-3	24A-3	38.1	22.23	25.22	11.1	141.4	145.2	35.7	4.8	45.44	381/86591	437.2	17.53
140-3	28A-3	44.45	25.4	25.22	12.7	152.2	156.8	41	5.6	48.87	517.2/117545	593.3	22.2
160-3	32A-3	50.8	28.58	31.55	14.27	181.8	186.6	47.8	6.4	58.55	680.4/154636	780.6	30.02
180-3	36A-3	57.15	35.71	35.48	17.46	204.4	210.2	53.6	7.2	65.84	840.7/191068	983.6	38.22
200-3	40A-3	63.5	39.68	37.85	19.85	223.5	230.4	60	8	71.55	1061.4/241227	1217.8	49.03
240-3	48A-3	76.2	47.63	47.35	23.81	271.3	278.6	72.39	9.5	87.83	1530.9/347932	1756.5	71.6

直板滚子链(A系列)
Roller chains with straight side plates (A series)

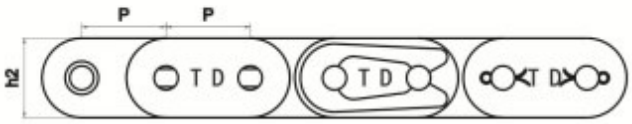

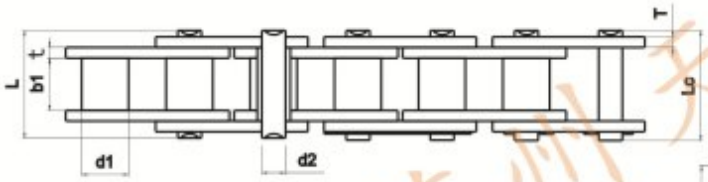

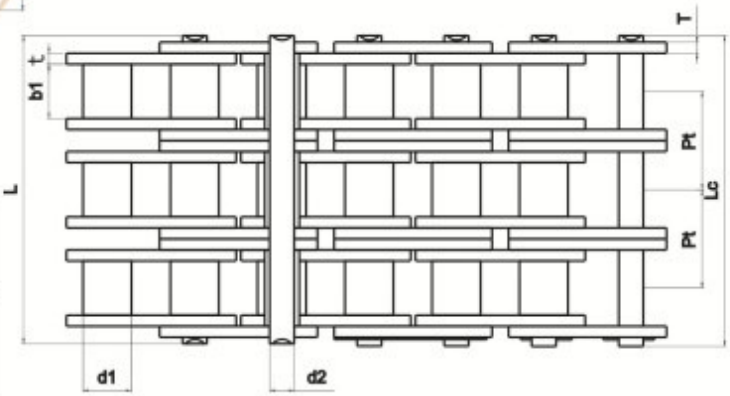

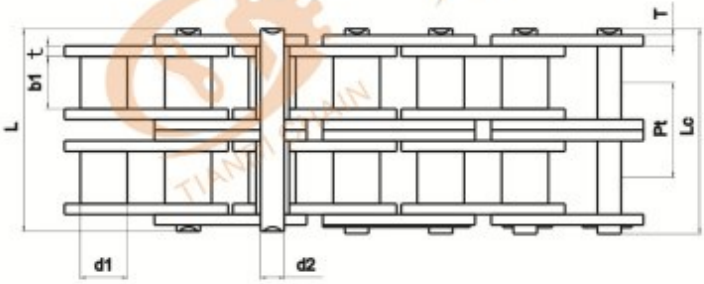

型号	天地链号	节距 Pitch	滚柱直径 Roller diameter	内节内宽 Width between inner plates	销轴直径 Pin diameter	销轴长度 Pin length		内片宽度 Inner plate depth	链板厚度 Plate thickness	排距 Transverse pitch	极限抗拉强度 Ultimate tensile strength	平均抗拉强度 Average tensile strength	每米重量 Weight per meter
Chain No.	Chain No.	P	d1 max	b1 min	d2 max	L max	Lc max	h2 max	t/T max	Pt	Q min	Q0	q
		mm	mm	mm	mm	mm	mm	mm	mm	mm	kN/Ibf	kN	kg/m
C35-1	C06C-1	9.525	5.08	4.77	3.58	12.4	13.17	9	1.3	-	7.9/1795	10.8	0.41
C40-1	C08A-1	12.7	7.95	7.85	3.96	16.6	17.8	12	1.5	-	14.1/3205	17.5	0.73
C50-1	C10A-1	15.875	10.16	9.4	5.08	20.7	22.2	15.09	2.03	-	22.2/5045	29.4	1.23
C60-1	C12A-1	19.05	11.91	12.57	5.94	25.9	27.7	18	2.42	-	31.8/7227	41.5	1.81
C80-1	C16A-1	25.4	15.88	15.75	7.92	32.7	35	24	3.25	-	56.7/12886	69.4	3.09
C100-1	C20A-1	31.75	19.05	18.9	9.53	40.4	44.7	30	4	-	88.5/20114	109.2	4.56
C120-1	C24A-1	38.1	22.23	25.22	11.1	50.3	54.3	35.7	4.8	-	127/28864	156.3	6.86
C140-1	C28A-1	44.45	25.4	25.22	12.7	54.4	59	41	5.6	-	172.4/39182	212	8.49
C160-1	C32A-1	50.8	28.58	31.55	14.27	64.8	69.6	47.8	6.4	-	226.8/51545	278.9	11.5
C35-2	C06C-2	9.525	5.08	4.77	3.58	22.5	23.3	9	1.3	10.13	15.8/3591	19.7	0.66
C40-2	C08A-2	12.7	7.95	7.85	3.96	31	32.2	12	1.5	14.38	28.2/6409	35.9	1.43
C50-2	C10A-2	15.875	10.16	9.4	5.08	38.9	40.4	15.09	2.03	18.11	44.4/10091	58.1	2.42
C60-2	C12A-2	19.05	11.91	12.57	5.94	48.8	50.5	18	2.42	22.78	63.6/14455	82.1	3.58
C80-2	C16A-2	25.4	15.88	15.75	7.92	62.7	64.3	24	3.25	29.29	113.4/25773	141.8	6.12
C100-2	C20A-2	31.75	19.05	18.9	9.53	76.4	80.5	30	4	35.76	177/40227	219.4	9.08
C120-2	C24A-2	38.1	22.23	25.22	11.1	95.8	99.7	35.7	4.8	45.44	254/57727	314.9	13.6
C140-2	C28A-2	44.45	25.4	25.22	12.7	103.3	107.9	41	5.6	48.87	344.8/78364	427.5	16.86
C160-2	C32A-2	50.8	28.58	31.55	14.27	123.3	128.1	47.8	6.4	58.55	453.6/103091	562.4	22.9
C40-3	C08A-3	12.7	7.95	7.85	3.96	45.4	46.6	12	1.5	14.38	42.3/9614	50	2.14
C50-3	C10A-3	15.875	10.16	9.4	5.08	57	58.5	15.09	2.03	18.11	66.6/15136	77.8	3.62
C60-3	C12A-3	19.05	11.91	12.57	5.94	71.5	73.3	18	2.42	22.78	95.4/21682	111.1	5.36
C80-3	C16A-3	25.4	15.88	15.75	7.92	91.7	93.6	24	3.25	29.29	170.1/38659	198.4	9.1
C100-3	C20A-3	31.75	19.05	18.9	9.53	112.2	116.3	30	4	35.76	265.5/60341	309.6	13.6
C120-3	C24A-3	38.1	22.23	25.22	11.1	141.4	145.2	35.7	4.8	45.44	381/86591	437.2	20.43
C140-3	C28A-3	44.45	25.4	25.22	12.7	152.2	156.8	41	5.6	48.87	517.2/117545	593.3	25.23
C160-3	C32A-3	50.8	28.58	31.55	14.27	181.8	186.6	47.8	6.4	58.55	680.4/154636	780.6	34.19

短节距精密滚子链（B系列单排）
Short pitch precision roller chains (B series simplex)

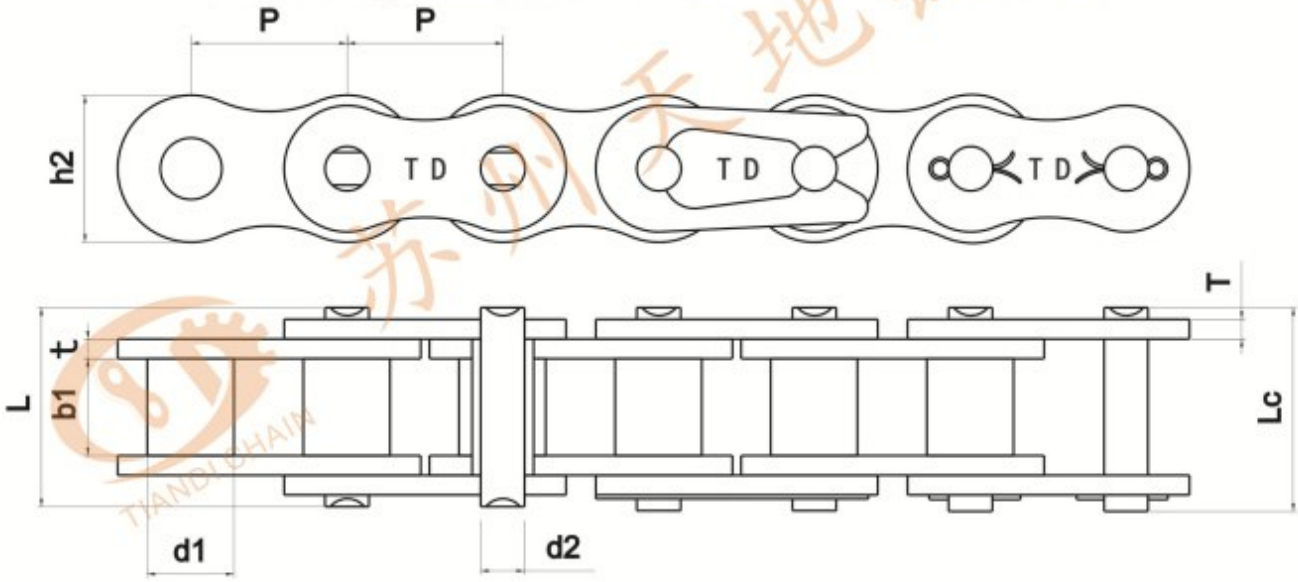

接头CL

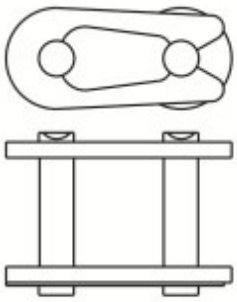

半接头0L

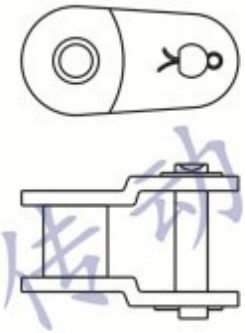

天地链号	节距 Pitch	滚柱直径 Roller diameter	内节内宽 Width between inner plates	销轴直径 Pin diameter	销轴长度 Pin length		内片宽度 Inner plate depth	链板厚度 Plate thickness	排距 Transverse pitch	极限抗拉强度 Ultimate tensile strength	平均抗拉强度 Average tensile strength	每米重量 Weight per meter
Chain No.	P	d1 max	b1 min	d2 max	L max	Lc max	h2 max	t/T max	Pt	Q min	Q0	q
	mm	mm	mm	mm	mm	mm	mm	mm	mm	kN/Ibf	kN	kg/m
03B-1	5	3.2	2.5	1.49	6.8	7.4	4.1	0.6			2.2	0.08
04B-1	6	4	2.8	1.85	6.8	7.8	5	0.6(0.8)	-	3/682	3.2	0.11
05B-1	8	5	3	2.31	8.2	8.9	7.1	0.8	-	5/1136	5.9	0.2
06B-1	9.525	6.35	5.72	3.28	13.15	14.1	8.2	1.3	-	9/2045	10.4	0.41
08B-1	12.7	8.51	7.75	4.45	16.7	18.2	11.8	1.6	-	18/4091	19.4	0.69
10B-1	15.875	10.16	9.65	5.08	19.5	20.9	14.7	1.7	-	22.4/5091	27.5	0.93
12B-1	19.05	12.07	11.68	5.72	22.5	24.2	16	1.85	-	29/6591	32.2	1.15
16B-1	25.4	15.88	17.02	8.28	36.1	39.4	21	4.15/3.1	-	60/13636	72.8	2.71
20B-1	31.75	19.05	19.56	10.19	41.3	45	26.4	4.50/3.5	-	95/21591	106.7	3.7
24B-1	38.1	25.4	25.4	14.63	53.4	57.8	33.2	6/4.8	-	160/36364	178	7.1
28B-1	44.45	27.94	30.99	15.9	65.1	69.5	36.7	7.50/6	-	200/45455	222	8.5
32B-1	50.8	29.21	30.99	17.81	66	71	42	7/6	-	250/56818	277.5	10.25
40B-1	63.5	39.37	38.1	22.89	82.2	89.2	52.96	8.50/8	-	355/80682	394	16.35
48B-1	76.2	48.26	45.72	29.24	99.1	107	63.8	12/10	-	560/127272	621.6	25
56B-1	88.9	53.98	53.34	34.32	114.6	123	77.8	13.5/12	-	850/193180	940	35.78
64B-1	101.6	63.5	60.96	39.4	130	138.5	90.17	15/13	-	112/254544	1240	46
72B-1	114.3	72.39	68.58	44.48	147.4	156.4	103.6	17/15	-	1400/318180	1550	60.8

短节距精密滚子链(B系列双排)
Short pitch precision roller chains (B series duplex)

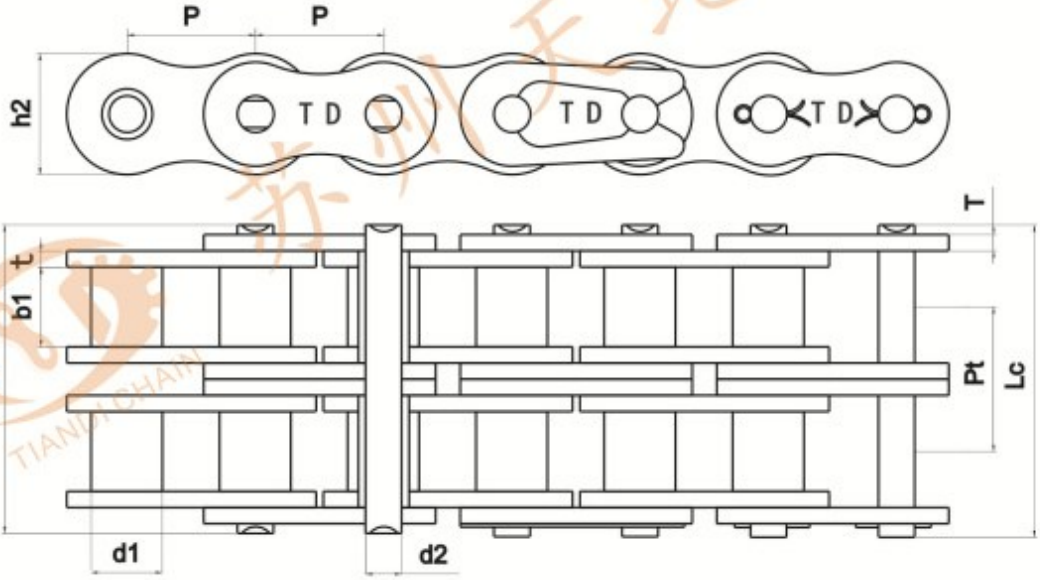

接头CL

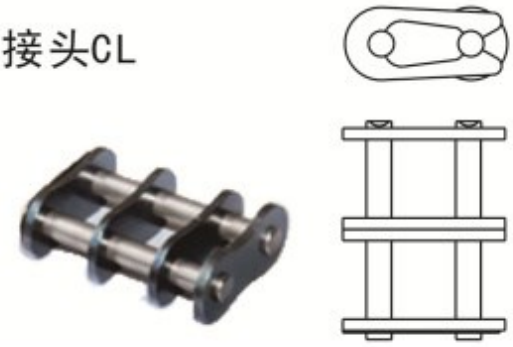

半接头OL

天地链号	节距 Pitch	滚柱直径 Roller diameter	内节内宽 Width between inner plates	销轴直径 Pin diameter	销轴长度 Pin length		内片宽度 Inner plate depth	链板厚度 Plate thickness	排距 Transverse pitch	极限抗拉强度 Ultimate tensile strength	平均抗拉强度 Average tensile strength	每米重量 Weight per meter
Chain No.	P	d1 max	b1 min	d2 max	L max	Lc max	h2 max	t/T max	Pt	Q min	Q0	q
	mm	mm	mm	mm	mm	mm	mm	mm	mm	kN/Ibf	kN	kg/m
04B-2	6	4	2.8	1.85	14	14.9	5	0.8	6.1	5/636	5.4	0.21
05B-2	8	5	3	2.31	13.9	14.5	7.1	0.8	5.64	7.8/1773	10.2	0.33
06B-2	9.525	6.35	5.72	3.28	23.4	24.4	8.2	1.3	10.24	16.9/3841	18.7	0.77
08B-2	12.7	8.51	7.75	4.45	31	32.2	11.8	1.6	13.92	32/7273	38.7	1.34
10B-2	15.875	10.16	9.65	5.08	36.1	37.5	14.7	1.7	16.59	44.5/10114	56.2	1.84
12B-2	19.05	12.07	11.68	5.72	42	43.6	16	1.85	19.46	57.8/13136	66.1	2.31
16B-2	25.4	15.88	17.02	8.28	68	69.3	21	4.15/3.1	31.88	106/24091	133	5.42
20B-2	31.75	19.05	19.56	10.19	77.8	81.5	26.4	4.50/3.5	36.45	170/38636	211.2	7.2
24B-2	38.1	25.4	25.4	14.63	101.7	106.2	33.2	6/4.8	48.36	280/63636	319.2	13.4
28B-2	44.45	27.94	30.99	15.9	124.6	129.1	36.7	7.50/6	59.56	360/81818	406.8	16.6
32B-2	50.8	29.21	30.99	17.81	124.6	129.6	42	7/6	58.55	450/102273	508.5	21
40B-2	63.5	39.37	38.1	22.89	154.5	161.5	52.96	8.50/8	72.29	630/143182	711.9	32
48B-2	76.2	48.26	45.72	29.24	190.4	198.2	63.8	12/10	91.21	1000/227272	1130	50
56B-2	88.9	53.98	53.34	34.32	221.2	229.6	77.8	13.5/12	106.6	1600/363635	1760	71.48
64B-2	101.6	63.5	60.96	39.4	249.9	258.4	90.17	15/13	119.89	2000/454544	2200	91
72B-2	114.3	72.39	68.56	44.48	283.7	292.7	103.6	17/15	136.27	2500/568180	2750	120.4

短节距精密滚子链（B系列三排）
Short pitch precision roller chains (B series triplex)

接头CL

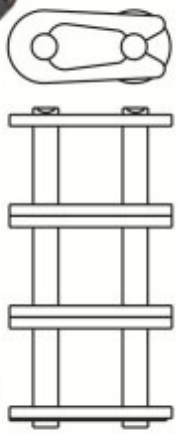

半接头OL

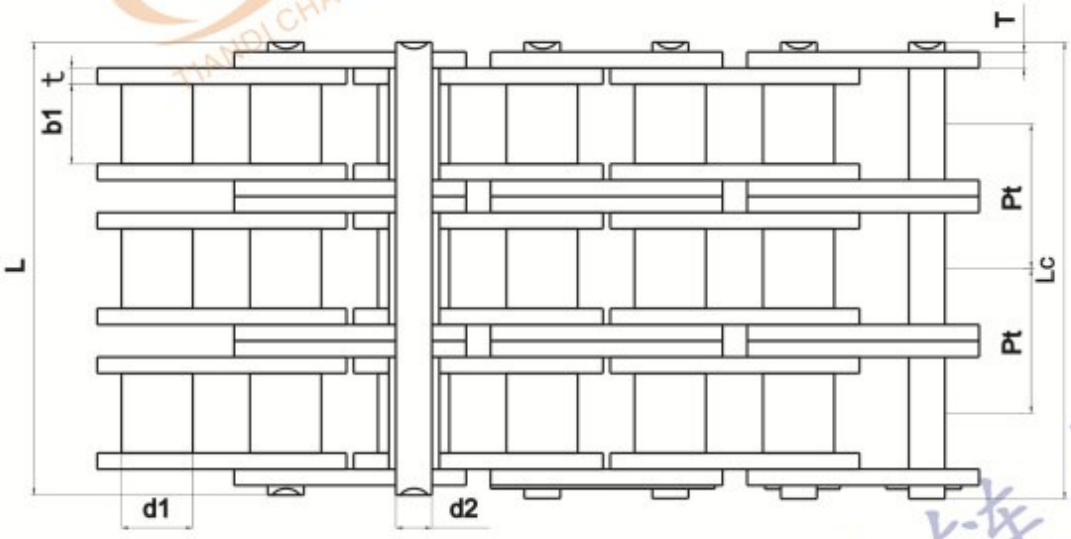

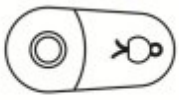

天地链号	节距 Pitch	滚柱直径 Roller diameter	内节内宽 Width between inner plates	销轴直径 Pin diameter	销轴长度 Pin length		内片宽度 Inner plate depth	链板厚度 Plate thickness	排距 Transverse pitch	极限抗拉强度 Ultimate tensile strength	平均抗拉强度 Average tensile strength	每米重量 Weight per meter
Chain No.	P	d1 max	b1 min	d2 max	L max	Lc max	h2 max	t/T max	Pt	Q min	Q0	q
	mm	mm	mm	mm	mm	mm	mm	mm	mm	kN/Ibf	kN	kg/m
05B-3	8	5	3	2.31	19.5	20.2	7.1	0.8	5.64	11.1/2523	13.8	0.48
06B-3	9.525	6.35	5.72	3.28	33.5	34.6	8.2	1.3	10.24	24.9/5659	30.1	1.16
08B-3	12.7	8.51	7.75	4.45	45.1	46.1	11.8	1.6	13.92	47.5/10795	57.8	2.03
10B-3	15.875	10.16	9.65	5.08	52.7	54.1	14.7	1.7	16.59	66.7/15159	84.5	2.77
12B-3	19.05	12.07	11.68	5.72	61.5	63.1	16	1.85	19.46	86.7/19705	101.8	3.46
16B-3	25.4	15.88	17.02	8.28	99.8	101.2	21	4.15/3.1	31.88	160/36364	203.7	8.13
20B-3	31.75	19.05	19.56	10.19	114.2	117.9	26.4	4.50/3.5	36.45	250/56818	290	10.82
24B-3	38.1	52.4	25.4	14.63	150.1	154.6	33.2	6/4.8	48.36	425/96591	493	20.1
28B-3	44.45	27.94	30.99	15.9	184.2	188.7	36.7	7.50/6	59.56	530/120454	609.5	24.92
32B-3	50.8	29.21	30.99	17.81	183.2	188.2	42	7/6	58.55	670/152273	770.5	31.56
40B-3	63.5	39.37	38.1	22.89	226.8	233.8	52.96	8.50/8	72.29	950/215909	1092.5	48.1
48B-3	76.2	48.26	45.72	29.24	281.6	289.4	63.8	12/10	91.21	1500/340909	1710	75
56B-3	88.9	53.98	53.34	34.32	327.8	336.2	77.8	13.5/12	106.6	2240/545450	2464	107.18
64B-3	101.6	63.5	60.96	39.4	369.8	378.3	90.17	15/13	119.89	3000/681820	3300	136
72B-3	114.3	72.39	68.56	44.48	420	429	103.6	17/15	136.27	3750/852270	4125	180

直板滚子链(B系列)
Roller chains with straight side plates (B series)

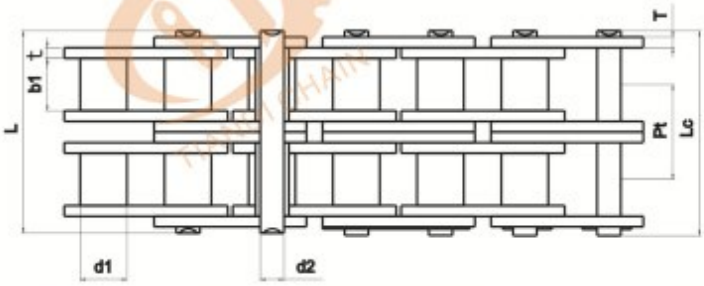

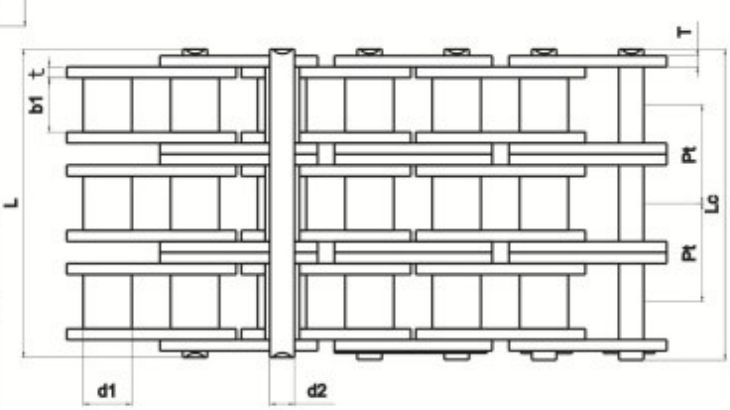

天地链号	节距 Pitch	滚柱直径 Roller diameter	内节内宽 Width between inner plates	销轴直径 Pin diameter	销轴长度 Pin length		内片宽度 Inner plate depth	链板厚度 Plate thickness	排距 Transverse pitch	极限抗拉强度 Ultimate tensile strength	平均抗拉强度 Average tensile strength	每米重量 Weight per meter
Chain No.	P	d1 max	b1 min	d2 max	L max	Lc max	h2 max	t/T max	Pt	Q min	Q0	q
	mm	mm	mm	mm	mm	mm	mm	mm	mm	kN/Ibf	kN	kg/m
C08B-1	12.7	8.51	7.75	4.45	16.7	18.2	11.8	1.6	-	18/4091	19.4	0.8
C10B-1	15.875	10.16	9.65	5.08	19.5	20.9	14.7	1.7	-	22.4/5091	27.5	1.06
C12B-1	19.05	12.07	11.68	5.72	22.5	24.2	16	1.85	-	29/6591	32.2	1.32
C16B-1	25.4	15.88	17.02	8.28	36.1	39.4	21	4.15/3.1	-	60/13636	72.8	3.08
C20B-1	31.75	19.05	19.56	10.19	41.3	45	26.4	4.5/3.5	-	95/21591	106.7	4.16
C24B-1	38.1	25.4	25.4	14.63	53.4	57.8	33.2	6/4.8	-	160/36364	178	7.47
C28B-1	44.45	27.94	30.99	15.9	65.1	69.5	36.7	7.5/6	-	200/45455	222	9.9
C32B-1	50.8	29.21	30.99	17.81	66	71	42	7/6	-	250/56818	277.5	10.45
C08B-2	12.7	8.51	7.75	4.45	31	32.2	11.8	1.6	13.92	32/7273	38.7	1.45
C10B-2	15.875	10.16	9.65	5.08	36.1	37.5	14.7	1.7	16.59	44.5/10114	56.2	2
C12B-2	19.05	12.07	11.68	5.72	42	43.6	16	1.85	19.46	57.8/13136	66.1	2.62
C16B-2	25.4	15.88	17.02	8.28	68	69.3	21	4.15/3.1	31.88	106/24091	133	6.1
C20B-2	31.75	19.05	19.56	10.19	77.8	81.5	26.4	4.5/3.5	36.45	170/38636	211.2	8.23
C24B-2	38.1	52.4	25.4	14.63	101.7	106.2	33.2	6/4.8	48.36	280/63636	319.2	14.77
C28B-2	44.45	27.94	30.99	15.9	124.6	129.1	36.7	7.5/6	59.56	360/81818	406.8	19.82
C32B-2	50.8	29.21	30.99	17.81	124.6	129.6	42	7/6	58.55	450/102273	508.5	20.94
C08B-3	12.7	8.51	7.75	4.45	45.1	46.1	11.8	1.6	13.92	47.5/10795	57.8	2.1
C10B-3	15.875	10.16	9.65	5.08	52.7	54.1	14.7	1.7	16.59	66.7/15159	84.5	2.87
C12B-3	19.05	12.07	11.68	5.72	61.5	63.1	16	1.85	19.46	86.7/19705	101.8	3.89
C16B-3	25.4	15.88	17.02	8.28	99.8	101.2	21	4.15/3.1	31.88	160/36364	203.7	9.12
C20B-3	31.75	19.05	19.56	10.19	114.2	117.9	26.4	4.5/3.5	36.45	250/56818	290	11.34
C24B-3	38.1	52.4	25.4	14.63	150.1	154.6	33.2	6/4.8	48.36	425/96591	493	22.1
C28B-3	44.45	27.94	30.99	15.9	184.2	188.7	36.7	7.5/6	59.56	530/120454	609.5	29.64
C32B-3	50.8	29.21	30.99	17.81	183.2	188.2	42	7/6	58.55	670/152273	770.5	31.27

加重系列滚子链
Heavy duty series roller chains

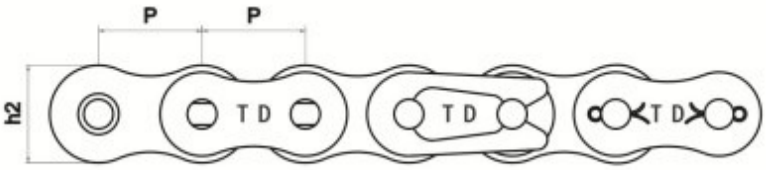

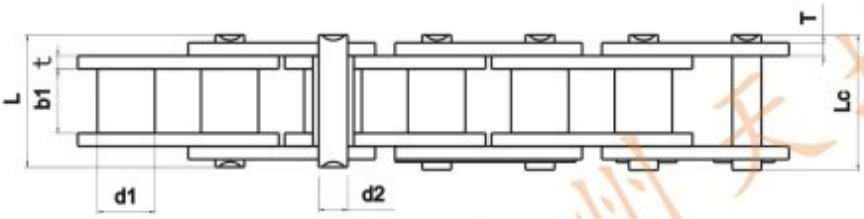

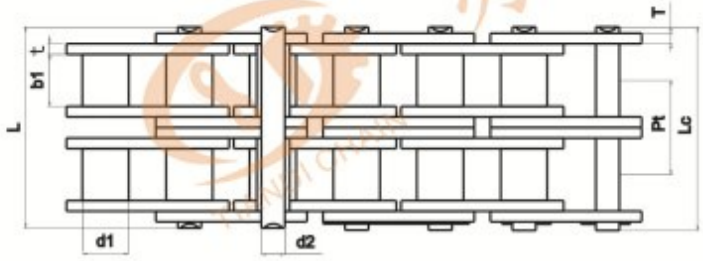

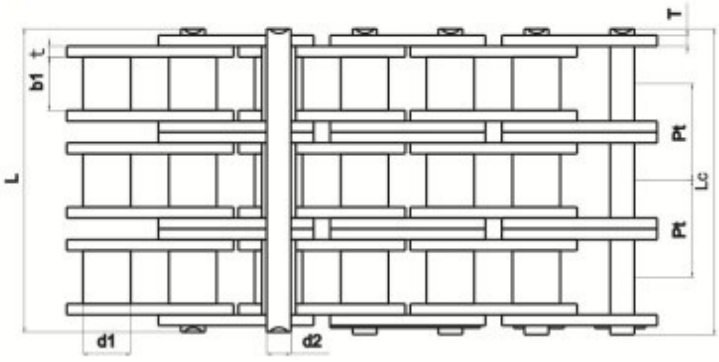

型号	天地链号	节距 Pitch	滚柱直径 Roller diameter	内节内宽 Width between inner plates	销轴直径 Pin diameter	销轴长度 Pin length		内片宽度 Inner plate depth	链板厚度 Plate thickness	排距 Transverse pitch	极限抗拉强度 Ultimate tensile strength	平均抗拉强度 Average tensile strength	每米重量 Weight per meter
Chain No.	Chain No.	P	d1 max	b1 min	d2 max	L max	Lc max	h2 max	t/T max	Pt	Q min	Q0	q
		mm	mm	mm	mm	mm	mm	mm	mm	mm	kN/lbf	kN	kg/m
25H		6.35	3.3	3.18	2.31	8.83	9.33	6	1	-	4.8/1091	5.6	0.17
35H		9.525	5.08	4.77	3.58	13.3	14.3	9	1.5	-	7.9/1795	10.8	0.41
40H	08AH-1	12.7	7.95	7.85	3.96	18.8	19.9	12	2.03	-	14.1/3205	17.5	0.82
50H	10AH-1	15.875	10.16	9.4	5.08	22.1	23.4	15.09	2.42	-	22.2/5045	29.4	1.25
60H	12AH-1	19.05	11.91	12.57	5.94	29.2	31	18	3.25	-	31.8/7227	41.5	1.87
80H	16AH-1	25.4	15.88	15.75	7.92	36.2	37.7	24	4	-	56.7/12886	69.4	3.1
100H	20AH-1	31.75	19.05	18.9	9.53	43.6	46.9	30	4.8	-	88.5/20114	109.2	4.52
120H	24AH-1	38.1	22.23	25.22	11.1	53.5	57.5	35.7	5.6	-	127/28864	156.3	6.6
140H	28AH-1	44.45	25.4	25.22	12.7	57.6	62.2	41	6.4	-	172.4/39182	212	8.3
160H	32AH-1	50.8	28.58	31.55	14.27	68.2	73	47.8	7.2	-	226.8/51545	278.9	10.3
180H	36AH-1	57.15	35.71	35.48	17.46	75.9	81.6	53.6	8	-	280.2/63682	341.8	14.83
200H	40AH-1	63.5	39.68	37.85	19.85	86.6	93.5	60	9.5	-	353.8/80409	431.6	19.16
240H	48AH-1	76.2	47.63	47.35	23.81	109.6	115.9	72.39	12.7	-	510.3/115977	622.5	30.4
60H-2	12AH-2	19.05	11.91	12.57	5.94	55.3	57.1	18	3.25	26.11	63.6/14455	84.5	3.71
80H-2	16AH-2	25.4	15.88	15.75	7.92	68.8	70.3	24	4	32.59	113.4/25773	145.3	6.15
100H-2	20AH-2	31.75	19.05	18.9	9.53	82.7	86	30	4.8	39.09	177/40227	225.9	9.03
120H-2	24AH-2	38.1	22.23	25.22	11.1	102.4	106.4	35.7	5.6	48.87	254/57727	322.7	13.13
140H-2	28AH-2	44.45	25.4	25.22	12.7	109.8	114.4	41	6.4	52.2	344.8/78364	437.7	16.6
160H-2	32AH-2	50.8	28.58	31.55	14.27	130.1	134.9	47.8	7.2	61.9	453.6/103091	571.6	20.2
200H-2	40AH-2	63.5	39.68	37.85	19.85	164.9	171.8	60	9.5	78.31	707.6/160818	894.9	38.11
60H-3	12AH-3	19.05	11.91	12.57	5.94	81.4	83.2	18	2.42	26.11	95.4/21682	113.9	5.54
80H-3	16AH-3	25.4	15.88	15.75	7.92	101.4	102.9	24	3.25	32.59	170.1/38659	203.5	9.42
100H-3	20AH-3	31.75	19.05	18.9	9.53	121.8	125.1	30	4	39.09	265.5/60341	314.8	12.96
120H-3	24AH-3	38.1	22.23	25.22	11.1	151.2	155.2	35.7	4.8	48.87	381/86591	444.7	19.64
140H-3	28AH-3	44.45	25.4	25.22	12.7	162	166.6	41	5.6	52.2	517.2/117545	598.4	24.9
160H-3	32AH-3	50.8	28.58	31.55	14.27	192	196.8	47.8	6.4	61.9	680.4/154636	787.3	30.1
200H-3	40AH-3	63.5	39.68	37.85	19.85	243.2	250.1	60	8	78.31	1061.4/241227	1228.2	57.06

开口销滚子链(A系列)
Cottered type short pitch precision roller chains(A series)

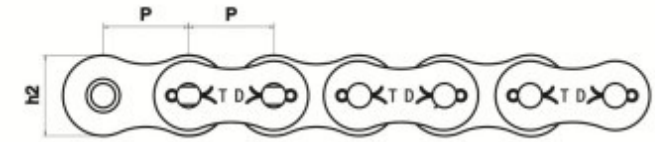

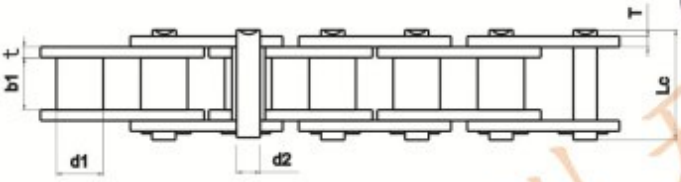

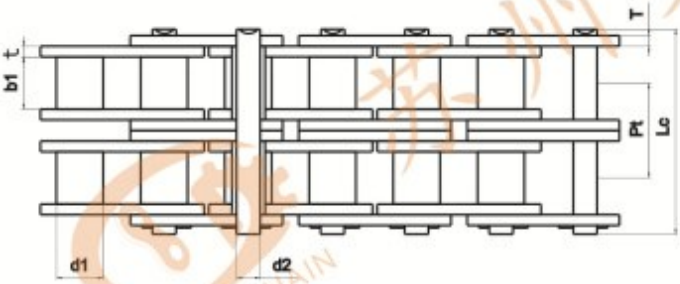

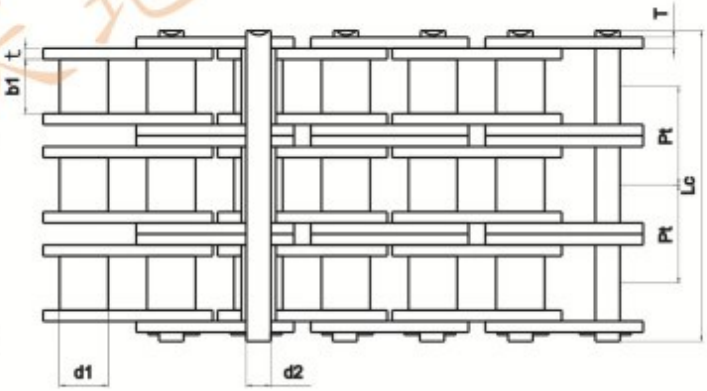

型号	天地链号	节距 Pitch	滚柱直径 Roller diameter	内节内宽 Width between inner plates	销轴直径 Pin diameter	销轴长度 Pin length	内片宽度 Inner plate depth	链板厚度 Plate thickness	排距 Transverse pitch	极限抗拉强度 Ultimate tensile strength	平均抗拉强度 Average tensile strength	每米重量 Weight per meter
Chain No.	Chain No.	P	d1 max	b1 min	d2 max	Lc max	h2 max	t/T max	Pt	Q min	Q0	q
		mm	mm	mm	mm	mm	mm	mm	mm	kN/Ibf	kN	kg/m
35	06C-1	9.525	5.08	4.77	3.58	13.17	9	1.3	-	7.9/1795	10.8	0.33
40	08A-1	12.7	7.95	7.85	3.96	17.8	12	1.5	-	14.1/3205	17.5	0.62
50	10A-1	15.875	10.16	9.4	5.08	22.2	15.09	2.03	-	22.2/5045	29.4	1.02
60	12A-1	19.05	11.91	12.57	5.94	27.7	18	2.42	-	31.8/7227	41.5	1.5
80	16A-1	25.4	15.88	15.75	7.92	35	24	3.25	-	56.7/12886	69.4	2.6
100	20A-1	31.75	19.05	18.9	9.53	44.7	30	4	-	88.5/20114	109.2	3.91
120	24A-1	38.1	22.23	25.22	11.1	54.3	35.7	4.8	-	127/28864	156.3	5.62
140	28A-1	44.45	25.4	25.22	12.7	59	41	5.6	-	172.4/39182	212	7.5
160	32A-1	50.8	28.58	31.55	14.27	69.6	47.8	6.4	-	226.8/51545	278.9	10.1
180	36A-1	57.15	35.71	35.48	17.46	78.6	53.6	7.2	-	280.2/63682	341.8	13.45
200	40A-1	63.5	39.68	37.85	19.85	87.2	60	8	-	353.8/80409	431.6	16.15
240	48A-1	76.2	47.63	47.35	23.81	103	72.39	9.5	-	510.3/115977	622.5	23.2
35-2	06C-2	9.525	5.08	4.77	3.58	23.3	9	1.3	10.13	15.8/3591	19.7	0.63
40-2	08A-2	12.7	7.95	7.85	3.96	32.2	12	1.5	14.38	28.2/6409	35.9	1.12
50-2	10A-2	15.875	10.16	9.4	5.08	40.4	15.09	2.03	18.11	44.4/10091	58.1	2
60-2	12A-2	19.05	11.91	12.57	5.94	50.5	18	2.42	22.78	63.6/14455	82.1	2.92
80-2	16A-2	25.4	15.88	15.75	7.92	64.3	24	3.25	29.29	113.4/25773	141.8	5.15
100-2	20A-2	31.75	19.05	18.9	9.53	80.5	30	4	35.76	177/40227	219.4	7.8
120-2	24A-2	38.1	22.23	25.22	11.1	99.7	35.7	4.8	45.44	254/57727	314.9	11.7
140-2	28A-2	44.45	25.4	25.22	12.7	107.9	41	5.6	48.87	344.8/78364	427.5	15.14
160-2	32A-2	50.8	28.58	31.55	14.27	128.1	47.8	6.4	58.55	453.6/103091	562.4	20.14
180-2	36A-2	57.15	35.71	35.48	17.46	144.4	53.6	7.2	65.84	560.5/127386	695	29.22
200-2	40A-2	63.5	39.68	37.85	19.85	158.8	60	8	71.55	707.6/160818	877.4	32.24
240-2	48A-2	76.2	47.63	47.35	23.81	190.8	72.39	9.5	87.83	1020.6/213955	1255.3	45.23
35-3	06C-3	9.525	5.08	4.77	3.58	33.5	9	1.3	10.13	23.7/5386	28.6	1.05
40-3	08A-3	12.7	7.95	7.85	3.96	46.6	12	1.5	14.38	42.3/9614	50	1.9
50-3	10A-3	15.875	10.16	9.4	5.08	58.5	15.09	2.03	18.11	66.6/15136	77.8	3.09
60-3	12A-3	19.05	11.91	12.57	5.94	73.3	18	2.42	22.78	95.4/21682	111.1	4.54
80-3	16A-3	25.4	15.88	15.75	7.92	93.6	24	3.25	29.29	170.1/38659	198.4	7.89
100-3	20A-3	31.75	19.05	18.9	9.53	116.3	30	4	35.76	265.5/60341	309.6	11.77
120-3	24A-3	38.1	22.23	25.22	11.1	145.2	35.7	4.8	45.44	381/86591	437.2	17.53
140-3	28A-3	44.45	25.4	25.22	12.7	156.8	41	5.6	48.87	517.2/117545	593.3	22.2
160-3	32A-3	50.8	28.58	31.55	14.27	186.6	47.8	6.4	58.55	680.4/154636	780.6	30.02
180-3	36A-3	57.15	35.71	35.48	17.46	210.2	53.6	7.2	65.84	840.7/191068	983.6	38.22
240-3	48A-3	76.2	47.63	47.35	23.81	278.6	72.39	9.5	87.83	1530.9/347932	1756.5	71.6

其他滚子链
Other roller chains

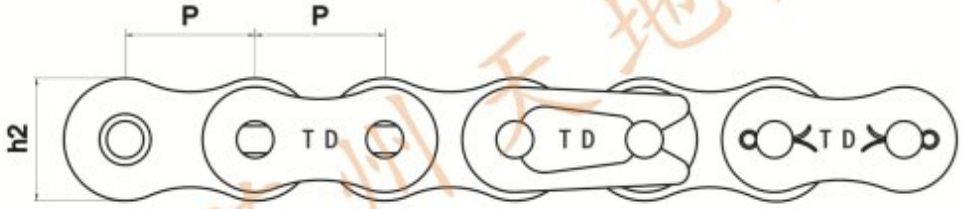

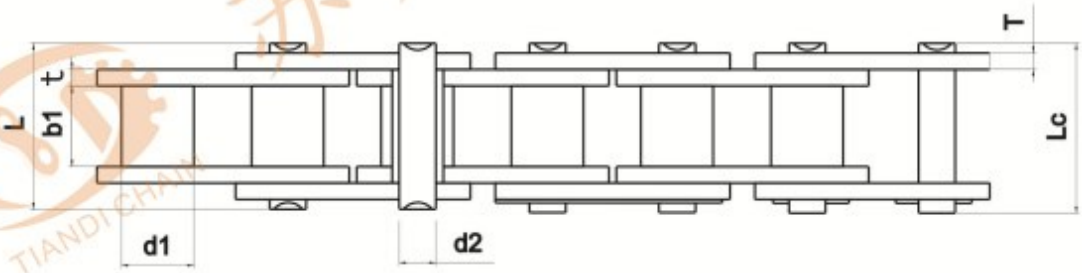

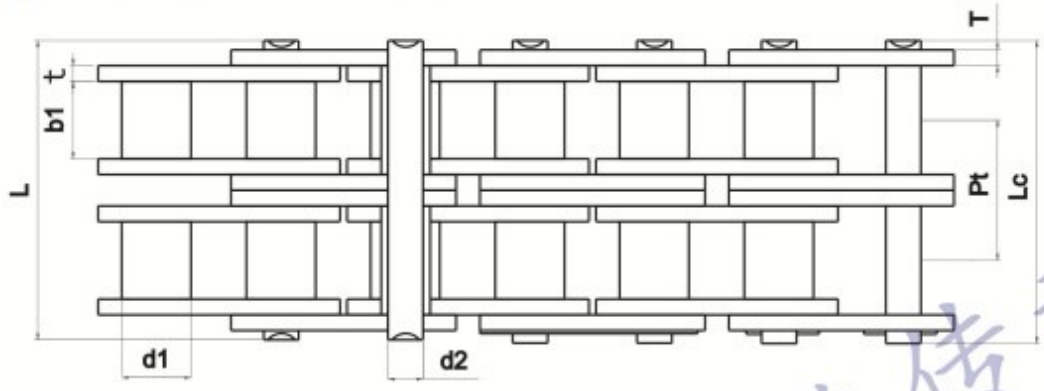

型号 Chain No.	天地链号 Chain No.	节距 Pitch P mm	滚柱直径 Roller diameter d1 max mm	内节内宽 Width between inner plates b1 min mm	销轴直径 Pin diameter d2 max mm	销轴长度 Pin length L max mm	销轴长度 Pin length Lc max mm	内片宽度 Inner plate depth h2 max mm	链板厚度 Plate thickness t/T max mm	排距 Transverse pitch Pt mm	极限抗拉强度 Ultimate tensile strength Q min kN/Ibf	平均抗拉强度 Average tensile strength Q0 kN	每米重量 Weight per meter q kg/m
P7.5		7.5	5	3	2.31	8.2	8.9	7	0.8	-	5/1136	5.9	0.22
P7.5-2		7.5	5	3	2.31	13.9	14.5	7	0.8	5.64	7.8/1773	10.2	0.35
06E		9.525	6.35	5.72	3.28	14	15	8	1.5/1.3	-			
06BF-2		9.525	6.35	5.72	4.45	23.75	24.5	9.5	1.5/1.3	10.24			0.93
410	081	12.7	7.75	3.3	3.6	9.4	10.2	9.7	1	-	6.86/1559	7.6	0.33
082		12.7	7.75	2.38	3.6	8.2	9.2	9.9	1	-			0.26
415		12.7	7.77	4.76	3.96	12.7	13.5	10.6	1.3		6.5/1559	7	0.38
415B	083	12.7	7.77	4.76	4.06	12.4	14.3	10.3	1.5/1.3	-	6.86/1559	7.6	0.38
415F19		12.7	7.77	4.76	3.6	11	12.4	10.3	1	-	6.86/1559	7.6	0.32
415H		12.7	7.77	4.76	3.96	13.2	14.6	11.8	1.5	-			
084		12.7	7.77	4.76	4.06	14.2	14.6	11.05	1.5/1.8	-	7/1559	7.8	0.4
41	085	12.7	7.77	6.25	3.6	13.8	15.3	9.9	1.3	-	6.67/1516	12.6	0.41
41-2	085-2	12.7	7.77	6.25	3.6	25.7	26.9	9.9	1.3	11.95	13.34/3032	16.9	0.81
086		12.7	8.51	5.3	4.45	13.9	14.9	11.8	1.6	-		17.8	
P11.667		11.667	8.51	7.75	4.45	16.7	18.2	11.8	1.5	-	18/4091	19.4	
P11.667-2		11.667	8.51	7.75	4.45	31	32.2	11.8	1.5	14.1	32/7273	38.7	
P30		30	15.88	15.75	7.92	32.7	35	24	3	-	56.7/12886	69.4	

自润滑链
Self-lubrication roller chains

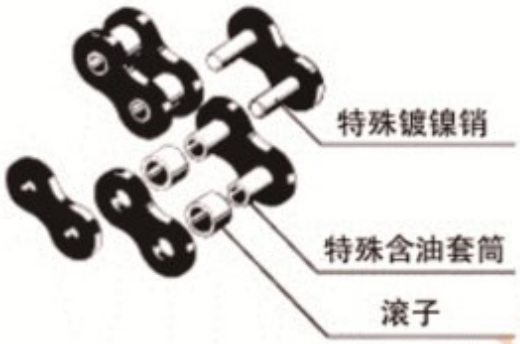

自润滑链条特点：
免加油、长寿命、可大幅减少链条替换频率、降低废弃物的产生。
采用特殊含油套筒，无需对链条注油。装置不会因为持续加油产生污染，可维持清洁的工作环境。
工作原理：
链条运行旋转时，油脂从特殊含油套筒的气孔渗出，在销轴与套筒之间的滑动部形成状态均一油膜层，含油是具有特殊运黏度、分子量和分散比的特订品，有效发挥抑制油膜干涩。

Self-lubrication chain features:
No refueling required,Long life, can greatly reduce the frequency of chain replacement, reduce the generation of waste.
Use special oil bush,No need to refuel the chain. Machines will not be polluted by continuous refueling, can maintain a clean working environment.
Working principle:
When the chain runs,Oil seeps through the stomata of special oil bush, an oil film is formed between the pin and bush.

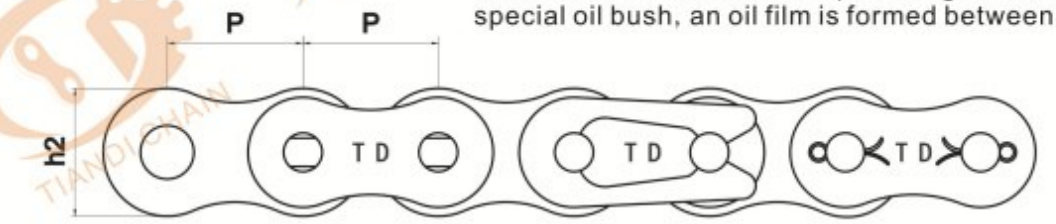

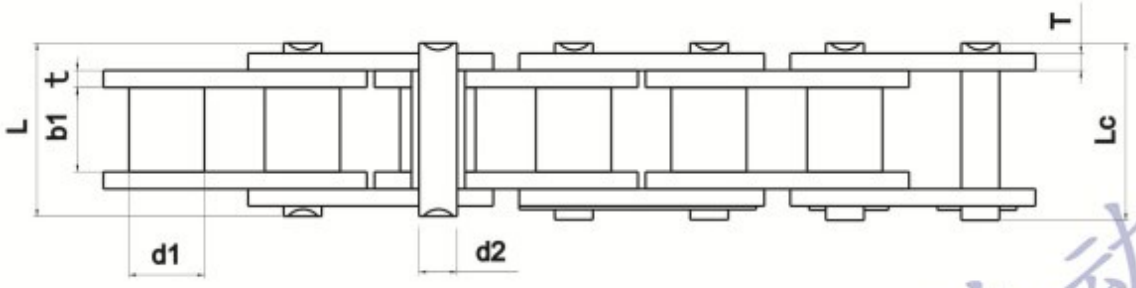

天地链号	节距 Pitch	滚柱直径 Roller diameter	内节内宽 Width between inner plates	销轴直径 Pin diameter	销轴长度 Pin length		内片宽度 Inner plate depth	链板厚度 Plate thickness	极限抗拉强度 Ultimate tensile strength	平均抗拉强度 Average tensile strength	每米重量 Weight per meter
Chain No.	P	d1 max	b1 min	d2 max	L max	Lc max	h2 max	t/T max	Q min	Q0	q
	mm	mm	mm	mm	mm	mm	mm	mm	kN/Ibf	kN	kg/m
35SLR	9.525	5.08	4.77	3.58	12.4	13.17	9	1.3	7.9/1795	10.8	0.33
40SLR	12.7	7.95	7.85	3.96	16.6	17.8	12	1.5	14.1/3205	17.5	0.62
50SLR	15.875	10.16	9.4	5.08	20.7	22.2	15.09	2.03	22.2/5045	29.4	1.02
60SLR	19.05	11.91	12.57	5.94	25.9	27.7	18	2.42	31.8/7227	41.5	1.5
80SLR	25.4	15.88	15.75	7.92	32.7	35	24	3.25	56.7/12886	69.4	2.6
100SLR	31.75	19.05	18.9	9.53	40.4	44.7	30	4	88.5/20114	109.2	3.91
120SLR	38.1	22.23	25.22	11.1	50.3	54.3	35.7	4.8	127/28864	156.3	5.62
140SLR	44.45	25.4	25.22	12.7	54.4	59	41	5.6	172.4/39182	212	7.5
160SLR	50.8	28.58	31.55	14.27	64.8	69.6	47.8	6.4	226.8/51545	278.9	10.1
06BSLR	9.525	6.35	5.72	3.28	13.15	14.1	8.2	1.3	9/2045	10.4	0.41
08BSLR	12.7	8.51	7.75	4.45	16.7	18.2	11.8	1.6	18/4091	19.4	0.69
10BSLR	15.875	10.16	9.65	5.08	19.5	20.9	14.7	1.7	22.4/5091	27.5	0.93
12BSLR	19.05	12.07	11.68	5.72	22.5	24.2	16	1.85	29/6591	32.2	1.15
16BSLR	25.4	15.88	17.02	8.28	36.1	39.4	21	4.15/3.1	60/13636	72.8	2.71
20BSLR	31.75	19.05	19.56	10.19	41.3	45	26.4	4.50/3.5	95/21591	106.7	3.7
24BSLR	38.1	25.4	25.4	14.63	53.4	57.8	33.2	6/4.8	160/36364	178	7.1
28BSLR	44.45	27.94	30.99	15.9	65.1	69.5	36.7	7.50/6	200/45455	222	8.5
32BSLR	50.8	29.21	30.99	17.81	66	71	42	7/6	250/56818	277.5	10.25

钢制套筒链
Steel bush chains

双滚珠链 Double bush chain

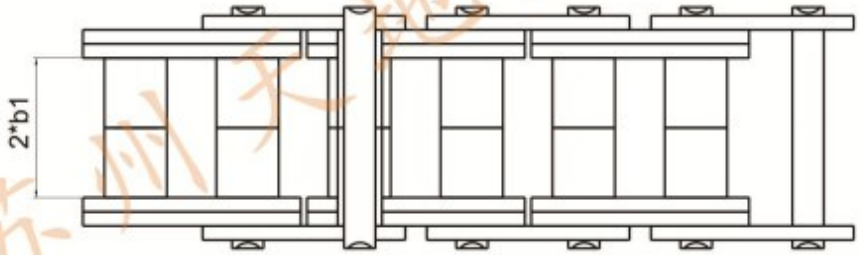

多滚珠链 Multiple bush chain

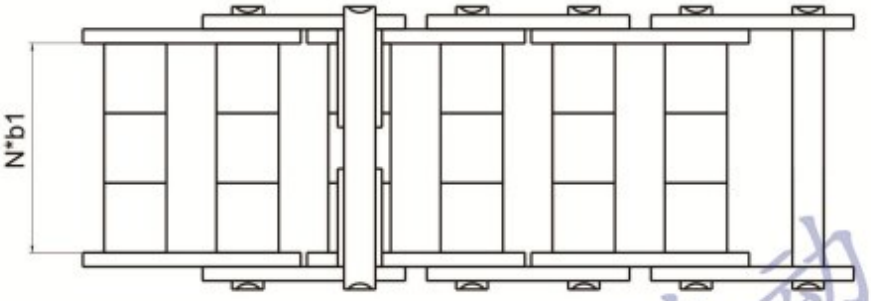

三排加宽链 Dilated triplex chain

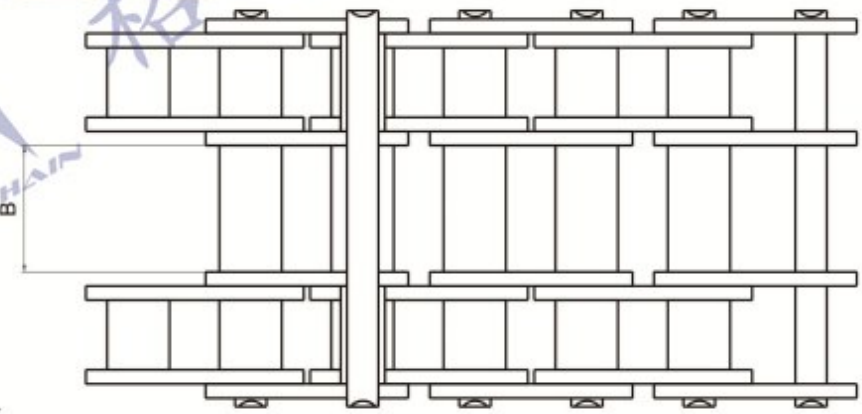

根据B尺寸定做
Customized according to B size

钢制套筒链
Steel bush chains

Type A

结构：由外片、中片、销轴、滚珠组成
Structure: outer plate、middle plate、pin and roller
特点：滚珠能转动、不形成内节
Point:roller can roll,can't form inner

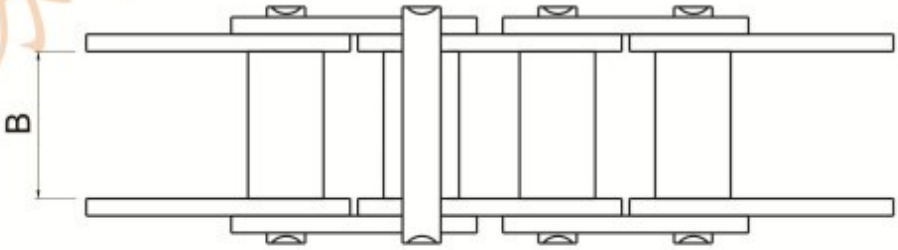

Type B

结构：由外片、内片、销轴、轴套、滚珠组成
Structure: outer plate、inner plate、pin、bush and roller
特点：滚珠能转动、形成内节
Point:roller can roll,can form inner

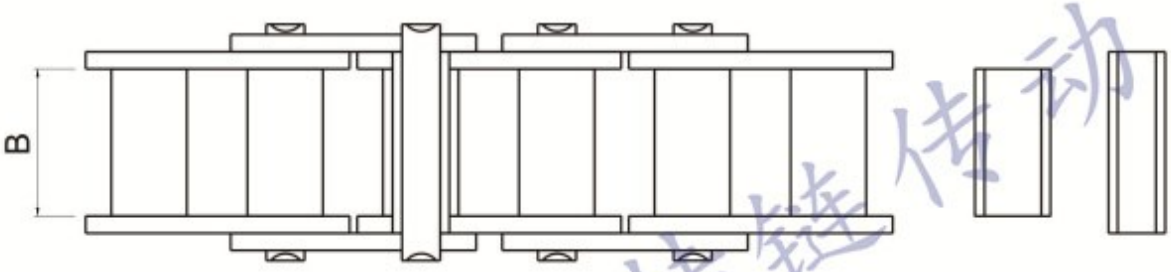

Type C

结构：由外片、内片、销轴、特殊滚珠组成
Structure: outer plate、inner plate、pin and special roller
特点：滚珠不能转动、形成内节
Point:roller can't roll,can form inner

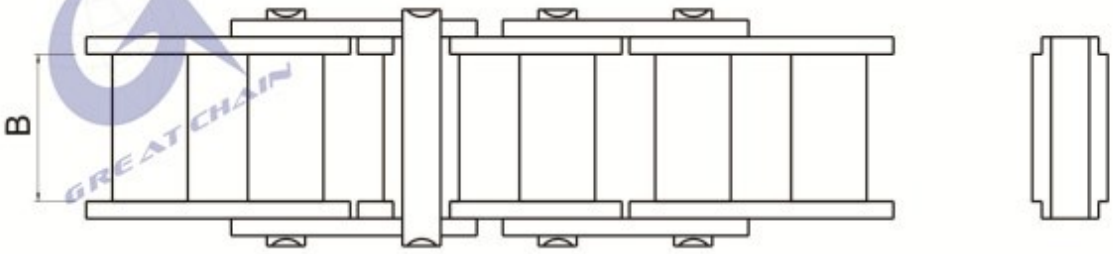

根据B尺寸定做
Customized according to B size

天地链条
TD CHAIN

双节距链条（小滚珠）
Double pitch chains (small roller)

8字型
bent side

直板型 C
straight side

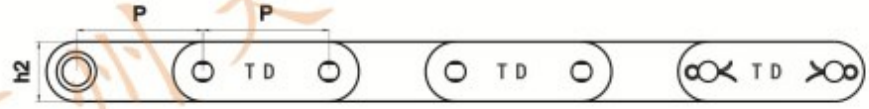

中孔
middle hole

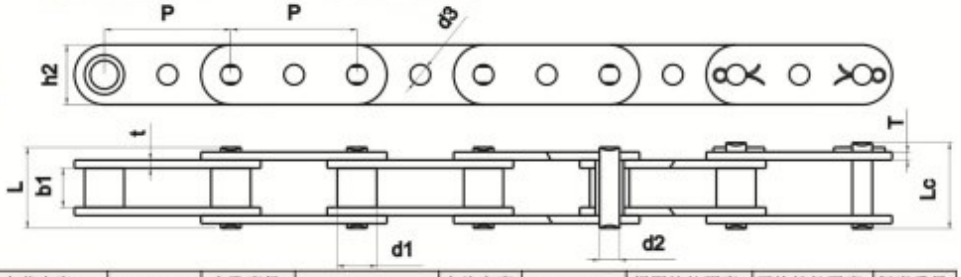

型号	天地链号	节距 Pitch	滚柱直径 Roller diameter	内节内宽 Width between inner plates	销轴直径 Pin diameter	中孔直径 Middle hole diameter	销轴长度 Pin length		内片宽度 Inner plate depth	链板厚度 Plate thickness	极限抗拉强度 Ultimate tensile strength	平均抗拉强度 Average tensile strength	每米重量 Weight per meter
Chain No.	Chain No.	P	d1 max	b1 min	d2 max	d3	L max	Lc max	h2 max	t/T max	Q min	Q0	q
		mm	mm	mm	mm	mm	mm	mm	mm	mm	kN/lbf	kN	kg/m
208A	A2040	25.4	7.95	7.85	3.96	-	16.6	17.8	12	1.5	14.1/3205	16.7	0.42
208B			8.51	7.75	4.45	-	16.7	18.2	11.8	1.6	18/4091	19.4	0.45
210A	A2050	31.75	10.16	9.4	5.08	-	20.7	22.2	15	2.03	22.2/5045	28.1	0.73
210B			10.16	9.65	5.08	-	19.5	20.9	14.7	1.7	22.4/5091	27.5	0.65
212A	A2060	38.1	11.91	12.57	5.94	-	25.9	27.7	18	2.42	31.8/7227	36.8	1.02
212B			12.07	11.68	5.72	-	22.5	25.2	16	1.85	29/6591	32.2	0.76
216A	A2080	50.8	15.88	15.75	7.92	-	32.7	36.5	24	3.25	56.7/12886	65.7	1.7
216B			15.88	17.02	8.28	-	36.1	39.1	21	4.15/3.1	60/13636	72.8	1.75
220A	A2100	63.5	19.05	18.9	9.53	-	40.4	44.7	30	4	88.5/20114	102.6	2.55
220B			19.05	19.56	10.19	-	41.3	45	26.4	4.5/3.5	95/14773	106.7	2.62
224A	A2120	76.2	22.23	25.22	11.1	-	50.3	54.3	35.7	4.8	127/28864	147.3	4.06
224B			25.4	25.4	14.63	-	53.4	57.8	33.2	6.0/4.8	160/36364	178	4.7
228B		88.9	27.94	30.99	15.9	-	65.1	69.5	36.7	7.5/6.0	200/45455	222	6.23
232B		101.6	29.21	30.99	17.81	-	66	71	42	7.0/6.0	250/56818	277.5	6.72
C208A	C2040	25.4	7.95	7.85	3.96	6/7	16.6	17.8	12	1.5	14.1/3205	16.7	0.5
C208AH	C2040H						18.8	19.9		2.03		17.2	0.65
C208B			8.51	7.75	4.45		16.7	18.2	11.8	1.6	18/4091	19.4	0.55
C210A	C2050	31.75	10.16	9.4	5.08	6/7/8	20.7	22.2	15	2.03	22.2/5045	28.1	0.78
C210AH	C2050H						22.1	23.4		2.4		29.4	0.9
C212A	C2060	38.1	11.91	12.57	5.94	6/8.2	25.9	27.7	18	2.42	31.8/7227	36.8	1.12
C212AH	C2060H						29.2	31.6		3.25		41.6	1.44
C216A	C2080	50.8	15.88	15.75	7.92	9	32.7	36.5	24	3.25	56.7/12886	65.7	2.08
C216AH	C2080H						36.2	39.4		4		70	2.54
	C2080F1	50.8	11.91	12.57	5.94	-	25	27.7	18	2.42	31.8/7227	36.8	-
	C2080F2	50.8	15.88	15.75	7.92	-	32.7	36.5	18	3.25	56.7/12886	65.7	-
C220A	C2100	63.5	19.05	18.9	9.53	10.1	40.4	44.7	30	4	88.5/20114	102.6	3.01
C220AH	C2100H						43.6	46.9		4.8		112.4	3.56
C224A	C2120	76.2	22.23	25.22	11.1	-	50.3	54.3	35.7	4.8	127/28864	147.3	4.66
C224AH	C2120H						53.5	57.5		5.6		160.9	5.26
C232A	C2160	101.6	28.58	31.75	14.27	-	64.8	69.6	47.8	6.4	226.8/51545	278.9	8.15
C232AH	C2160H						68.2	73		7.2		285.8	9.06

双节距链条(大滚珠)
Double pitch chains (big roller)

8字型
bent side

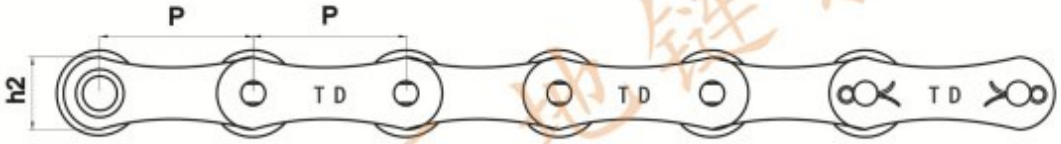

直板型 C
straight side

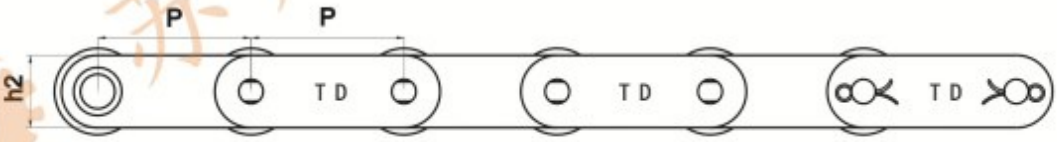

中孔
middle hole

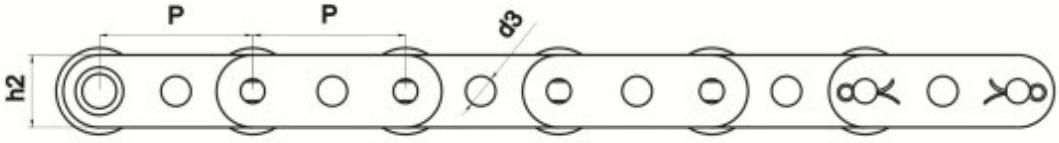

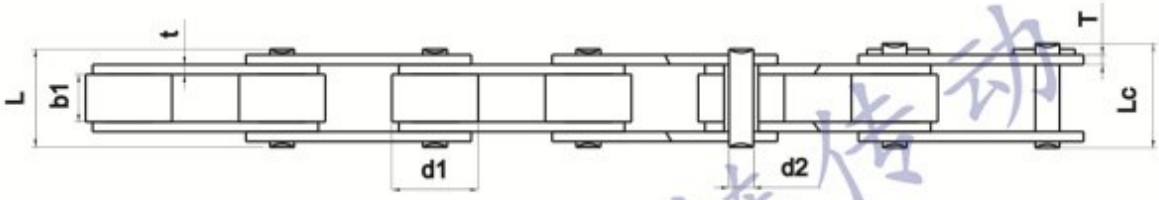

型号	天地链号	节距 Pitch	滚柱直径 Roller diameter	内节内宽 Width between inner plates	销轴直径 Pin diameter	中孔直径 Middle hole diameter	销轴长度 Pin length		内片宽度 Inner plate depth	链板厚度 Plate thickness	极限抗拉强度 Ultimate tensile strength	平均抗拉强度 Average tensile strength	每米重量 Weight per meter
Chain No.	Chain No.	P	d1 max	b1 min	d2 max	d3	L max	Lc max	h2 max	t/T max	Q min	Q0	q
		mm	mm	mm	mm	mm	mm	mm	mm	mm	kN/Ibf	kN	kg/m
C208AL	C2042	25.4	15.88	7.85	3.96	6/7	16.6	17.8	12	1.5	14.1/3205	16.7	0.84
C208AHL	C2042H		15.88	7.85	3.96	6/7	18.8	19.9	12	2.03	14.1/3205	17.2	0.99
C208BL			15.88	7.75	4.45	6/7	16.7	18.2	11.8	1.6	18/4091	19.4	0.89
C210AL	C2052	31.75	19.05	9.4	5.08	6/7/8	20.7	22.2	15	2.03	22.2/5045	28.1	1.27
C210AHL	C2052H				5.08	6/7/8	22.1	23.4			22.2/5045	28.1	1.39
	C2052F1				5.94	–	20.7	22.2			31.8/7227	36.8	1.28
C212AL	C2062	38.1	22.23	12.57	5.94	6/8.2	25.9	27.7	18	2.42	31.8/7227	36.8	1.61
C212AHL	C2062H						29.2	31.6		3.25		41.6	2.07
C216AL	C2082	50.8	28.58	15.75	7.92	9	32.7	36.5	24	3.25	56.7/12886	65.7	3.12
C216AHL	C2082H						36.2	39.4		4		70	3.58
C220AL	C2102	63.5	39.67	18.9	9.53	10.1	40.4	44.7	30	4	88.5/20114	102.6	4.83
C220AHL	C2102H						43.6	46.9		4.8		112.4	5.38
C224AL	C2122	76.2	44.45	25.22	11.1	–	50.6	54.3	35.7	4.8	127/28864	147.3	7.66
C224AHL	C2122H						53.5	57.5		5.6		160.9	8.26
C232AL	C2162	101.6	57.15	31.75	14.27	–	64.8	69.6	47.8	6.4	226.8/51545	278.9	13
C232AHL	C2162H						68.2	73		7.2		285.8	13.84

天地链条
TD CHAIN

摩托车传动链
Motorcycle driving chain

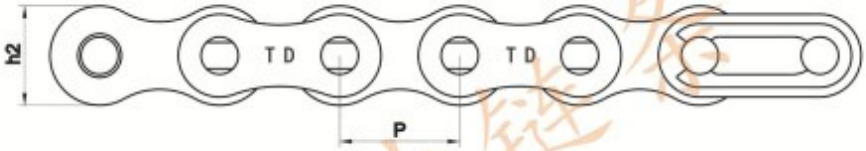

型号	天地链号	节距 Pitch	滚柱直径 Roller diameter	内节内宽 Width between inner plates	销轴直径 Pin diameter	销轴长度 Pin length		内片宽度 Plate depth	链板厚度 Plate thickness	极限抗拉强度 Ultimate tensile strength	平均抗拉强度 Average tensile strength	每米重量 Weight per meter
Chain No.	Chain No.	P	d1 max	b1 min	d2 max	L max	Lc max	h2 max	t/T max	Q min	Q0	q
		mm	mm	mm	mm	mm	mm	mm	mm	kN/Ibf	kN	kg/m
25	04C	6.35	3.3	3.18	2.31	7.9	8.4	6	0.8	3.5/795	4.6	0.15
25H	04MA	6.35	3.3	3.18	2.31	8.9	9.5	6	1.04	4.8/1091	5.5	0.17
25-2	04C-2	6.35	3.3	3.18	2.31	14.5	15	6	0.8	7/1591	8.6	0.28
219H	*05MA	7.774	4.59	4.9	3.2	12.5	13.6	7.5	1.3/1.5	9.8/1000	9.8	0.32
	05E	8	5.6	4.6	3.07	12.5	13.6	7.6	1/1.3	8.5/850	8	0.4
	05S	8	5	4.6	3.3	12	13	7.6	1/1.3	7.5/800	7.8	0.35
270H	*05MC	8.5	5	4.75	3.28	13.5	14.5	8.26	1/1.3	9.8/1050	10.3	0.43
	06MA(T、F)	9.525	6	9.5	4.5	18.6	-	9.3	1.85/1.48	11.8	14.1	0.61
	06B-1	9.525	6.35	5.72	3.28	13.15	-	8.26	1.3	8.9	10.3	0.41
	06B-2	9.525	6.35	5.72	3.28	23.4	-	8.26	1.3	16.9	18.1	0.74
	06C	9.525	5.08	4.77	3.58	12.4	-	9	1.3	7.9	9.8	0.33
	06C-2	9.525	5.08	4.77	3.58	23.8	-	9	1.3	15.9	17.6	0.66
420	08MA	12.7	7.77	6.25	3.96	14.7	16.1	12	1.5	16/3636	18.1	0.55
420H		12.7	7.77	6.25	3.96	17.5	18.9	12	1.8	20/3420	20	0.76
428	08MB	12.7	8.51	7.75	4.45	17	18.5	11.8	1.6	18/4091	20.1	0.7
428H	08MC	12.7	8.51	7.75	4.45	18.7	20.2	11.8	2.03	20.6/4682	23.4	0.79
520	10MA	15.875	10.16	6.25	5.08	18.7	19.5	15.09	2.03	26.5/6022	29.7	0.89
520H		15.875	10.16	6.25	5.08	19.5	21	15.09	2.42	26.5/6022	31.5	1.1
530	10MB	15.875	10.16	9.4	5.08	21.8	22.9	15.09	2.03	26.5/6022	29.7	1.06

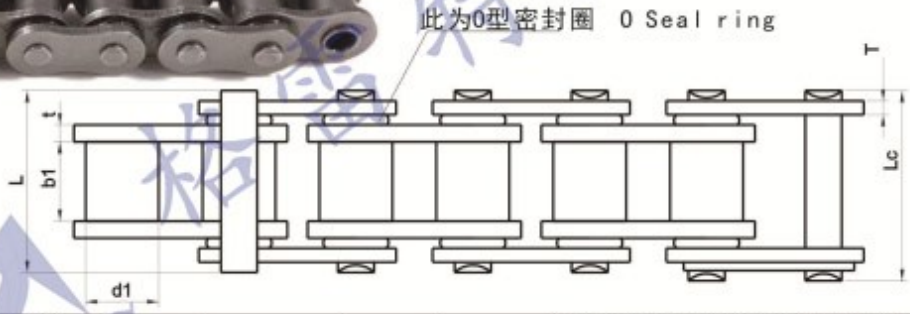

天地链号	节距 Pitch	滚柱直径 Roller diameter	内节内宽 Width between inner plates	销轴直径 Pin diameter	销轴长度 Pin length		内片宽度 Plate depth	链板厚度 Plate thickness	极限抗拉强度 Ultimate tensile strength	平均抗拉强度 Average tensile strength	每米重量 Weight per meter
Chain No.	P	d1 max	b1 min	d2 max	L max	Lc max	h2 max	t/T max	Q min	Q0	q
	mm	mm	mm	mm	mm	mm	mm	mm	kN/Ibf	kN	kg/m
428HSO	12.7	8.51	7.94	4.36	20.5	23	12.5	2/1.8	18.62	21	1.07
520SO	15.875	10.16	6.35	5.08	20.5	21.6	15.09	2.06	22.2	26.5	0.96
530SO	15.875	10.16	9.53	5.08	23.5	24.9	15.09	2.06	22.2	26.46	1.12

发动机链（正时链）
Engine timing chains

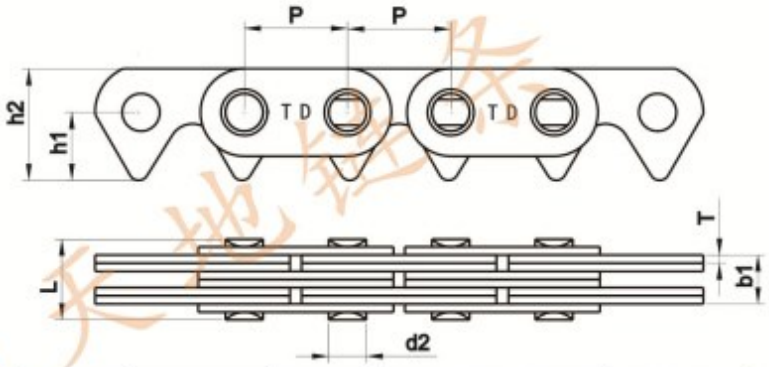

天地链号	节距 Pitch	组合形式 Type	导片链节内宽 Width between plates	销轴直径 Pin diameter	销轴长度 Pin length	链板厚度 Plate thickness	链板宽度 Plate depth	孔心高度 Distance between hole center and tooth	平均抗拉强度 Average tensile strength
Chain No.	P	N	b1	d2	L	T	h2	h1	Q
	mm		mm	mm	mm	mm	mm	mm	kN
C-358	9.525	5*4	10.8	3.92	15.4	1.5	9.85	4.7	13
C-359	9.525	6*5	13.8	3.92	18.5	1.5	9.85	4.7	16
C-366	9.525	6*5	13.8	3.92	18.5	1.5	9.85	4.7	16
C-3077	9.525	6*5	13.8	3.92	18.5	1.5	9.85	4.7	18.13
C-368	9.525	6*5	13.8	3.92	18.5	1.5	9.85	4.7	16
TC-344	9.525	8*7	20.1	3.47	25.3	1.5	9.31	4.75	21
TC-364	9.525	7*6	16.9	3.35	22.1	1.5	10.2	4.66	27
TC-362	9.525	6*5	13.8	3.35	19	1.5	10.2	4.66	24
TC-388	9.525	6*5	13.8	3.35	19	1.5	10.2	4.66	24
TC-351	9.525	6*5	13.8	3.35	19	1.5	9.31	4.75	16
TC-391	9.525	4*4	9.5	3.78	14.5	1.6	9.96	4.86	16.67
TC-387	9.525	4*4	9.3	3.78	13.2	1.5	9.76	4.7	18.62
TC-344	9.525	8*7	20.1	3.35	25.3	1.5	9.31	4.75	21
C-499	12.7	5*4	10.8	3.92	15.4	1.5	11.43	6.3	18.4
C-498	12.7	5*4	10.8	3.92	15.4	1.5	11.43	6.3	18.4
TC-427	12.7	8*7	20.1	3.92	25.3	1.5	11.43	6.3	30.7
TC-495	12.7	6*5	13.8	3.92	19	1.5	11.43	6.3	22.5

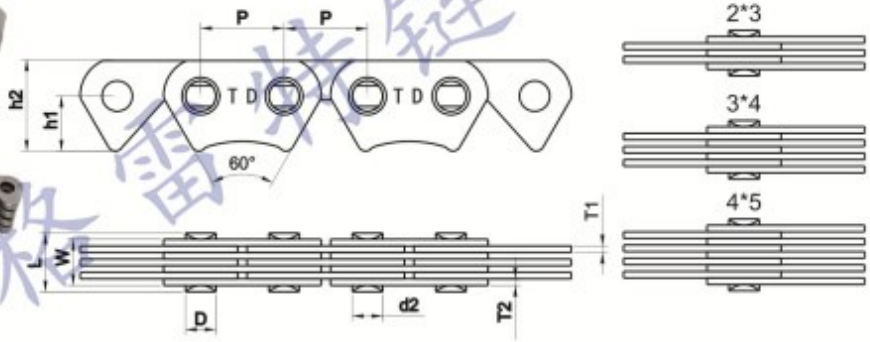

天地链号	节距 Pitch	链宽 Chain sidth	组合形式 Type	销轴直径 Pin diameter	销轴长度 Pin length	链板厚度 Plate thickness		链板宽度 Plate depth		极限抗拉强度 Ultimate tensile strength	平均抗拉强度 Average tensile strength	每米重量 Weight per meter
Chain No.	P	W		D	L	T1	T2	h1	h2	Q min	Q0	q
	mm	mm		mm	mm	mm	mm	mm	mm	kN/Ibf	kN	kg/m
CL04-A	6.35	4.35	2*3	2.58	6.35	1.04	0.8	3.9	6.72	5.49/1179	5.4	0.22
CL04-B	6.35	6.35	3*4	2.58	8.4	1.04	0.8	3.9	6.72	8.82/2004	9.2	0.28
CL04-C	6.35	9.4	4*5	2.58	10.45	1.04	0.8	3.9	6.72	11.76/2672	12.3	0.35

外接触式齿型链
Flank contact silent chains

内导式
Middle guide

外导式
Side guide

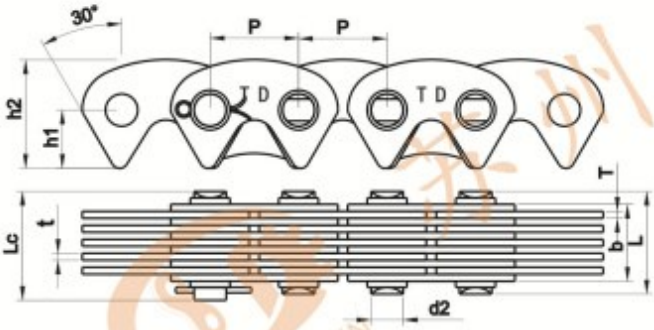

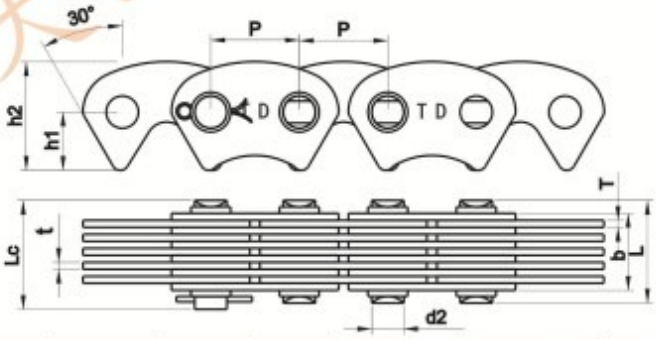

天地链号	节距 Pitch	链宽 Chain width	销轴直径 Pin diameter	销轴长度 Pin length		孔心到牙齿距离 Dsitance from hole center to tooth	链板宽度 Plate depth	链板厚度 Plate thickness	轨道形式 Guide type	片数 Number of plates	极限抗拉强度 Ultimate tensile strength	平均抗拉强度 Average tensile strength	每米重量 Weight per meter
Chain No.	P	b min	d2 max	L max	Lc max	h1 max	h2 max	t/T max		n	Q min	Q0	q
	mm	mm	mm	mm	mm	mm	mm	mm			kN/Ibf	kN	kg/m
SC3	9.525	13.5	3.28	18.5	20	5.3	10	1.5	Outside	9	10/2272	11.2	0.6
		16.5		21.5	23				Outside	11	12.5/2840	14	0.73
		19.5		24.5	26				Outside	13	15/3409	16.8	0.85
		22.5		27.5	29				Outside	15	17.5/3997	19.6	1
		28.5		33.5	35				Inside	19	22.5/5114	25.2	1.26
SC4	12.7	19.5	4.45	24.5	26	7	13.4	1.5	Outside	13	23.4/5318	26.2	1.15
		22.5		27.5	29				Outside	15	27.4/6227	30.6	1.33
		25.5		30.5	32				Outside	17	31.3/7114	35	1.5
		28.5		33.5	35				Inside	19	35.2/8000	39.4	1.68
		34.5		39.5	41				Inside	23	43.0/9772	48.1	2.04
		40.5		45.5	47				Inside	27	50.8/11364	56.8	2.39
		46.5		51.5	53				Inside	31	58.6/13318	65.6	2.74
		52.5		57.5	59				Inside	35	66.4/15091	74.3	3.1
SC5	15.875	30	5.92	37	38.2	8.7	16.7	2	Inside	15	45.6/10364	50.6	2.21
		38		45	46.2				Inside	19	58.6/13318	65	2.8
		46		53	54.2				Inside	23	71.7/16295	79.5	3.39
		54		61	62.4				Inside	37	84.7/19250	94	3.99
		62		69	70.4				Inside	31	97.7/22204	108.4	4.58
SC6	19.05	38	6.9	45	46.5	10.5	20	2	Inside	19	70/15909	77.6	3.37
		46		53	54.5				Inside	23	86/19545	95.4	4.08
		54		61	62.8				Inside	27	102/23182	113.2	4.78
		62		69	70.8				Inside	31	117/26591	129.8	5.5
		70		77	78.8				Inside	35	133/30227	147.6	6.2
SC8	25.4	45	8.9	52	53.5	14	26.7	3	Inside	15	111/25227	123.2	5.31
		51		58	59.5				Inside	17	125/28409	138.7	6.02
		57		64	65.5				Inside	19	141/32045	156.5	6.37
		69		76.2	77.7				Inside	23	172/39091	190.9	8.15
		81		88.2	89.7				Inside	27	203/46163	225.3	9.57
		93		100.2	101.7				Inside	31	235/53409	260.8	10.98
SC10	31.75	57	10.84	66.6	69.6	17.5	33.4	3	Inside	19	165/37500	183.1	8.42
		69		78.6	81.6				Inside	23	201/45681	223.1	10.19
		81		90.6	93.6				Inside	27	237/53863	263.2	11.96
		93		102.6	105.6				Inside	31	273/62045	303	13.73
		105		114.6	117.6				Inside	35	310/70454	341	15.5
		117		126.6	129.6				Inside	39	346/78636	380.6	17.27

内接触式齿型链
Croch contact silent chains

内导式
Middle guide

外导式
Side guide

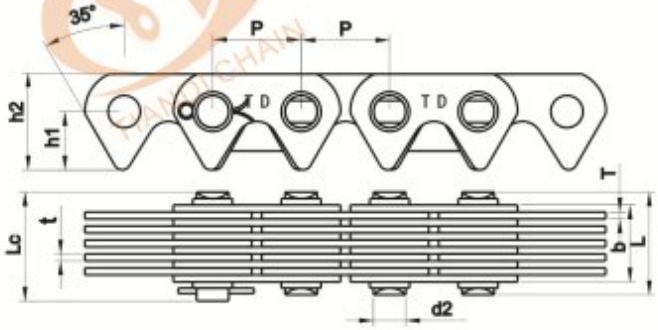

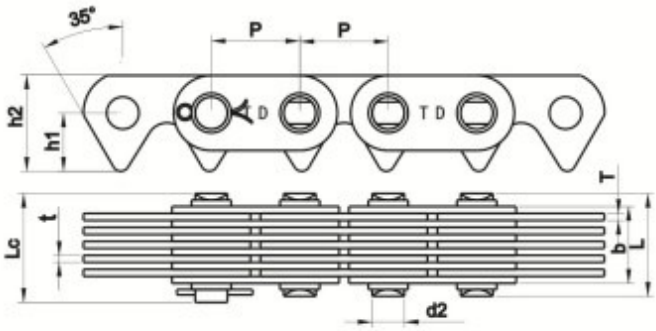

天地链号	节距 Pitch	链宽 Chain width	销轴直径 Pin diameter	销轴长度 Pin length		孔心到牙齿距离 Dsitance from hole center to tooth	链板宽度 Plate depth	链板厚度 Plate thickness	轨道形式 Guide type	片数 Number of plates	极限抗拉强度 Ultimate tensile strength	平均抗拉强度 Average tensile strength	每米重量 Weight per meter
Chain No.	P	b min	d2 max	L max	Lc max	h1 max	h2 max	t/T max		n	Q min	Q0	q
	mm	mm	mm	mm	mm	mm	mm	mm			kN/Ibf	kN	kg/m
03C	4.76	10.2	1.62	15.2	16.7	1.9	4.9	0.6					
C4-120	12.7	19.5	4.45	24.5	26	6.62	12.1	1.5	Inside	13	20/4545	22.2	1.2
C4-123		22.5		27.5	29				Inside	15	23/5227	25.5	1.37
C4-129		28.5		33.5	35				Inside	19	28.5/6477	31.6	1.72
C4-132		31.5		36.5	38				Inside	21	31.5/7159	34.9	1.89
C4-138		37.5		42.5	44				Inside	25	38/8636	42.1	2.22
C4-150		49.5		54.5	56				Inside	33	50/11363	55.5	2.9
C4-320	12.7	19.5	4.45	24.5	26	6.62	12.1	1.5	Outside	13	20/4545	22.2	1.21
C4-323		22.5		27.5	29				Outside	15	23/5227	25.5	1.38
C4-329		28.5		33.5	35				Outside	19	28.5/6477	31.6	1.73
C4-332		31.5		36.5	38				Outside	21	31.5/7159	34.9	1.9
C4-338		37.5		42.5	44				Outside	25	38/8636	42.1	2.23

输送链

CONVEYOR CHAIN

空心销轴链
Hollow pin chains

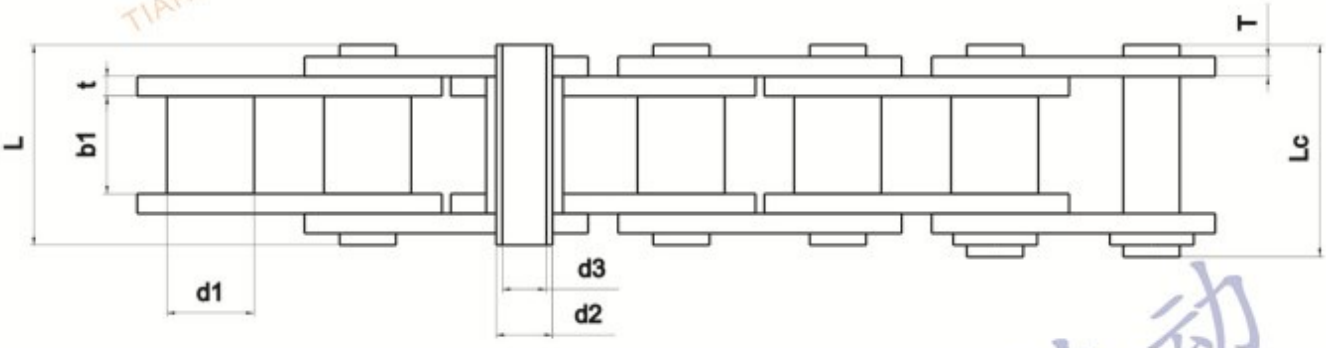

型号	天地链号	节距 Pitch	滚柱直径 Bush diameter	内节内宽 Width between inner plates	销轴直径 Pin diameter		销轴长度 Pin length		内片宽度 Inner plate depth	链板厚度 Plate thickness	极限抗拉强度 Ultimate tensile strength	平均抗拉强度 Average tensile strength	每米重量 Weight per meter
Chain No.		P	d1 max	b1 min	d2 max	d3 min	L max	Lc max	h2 max	t/T max	Q min	Q0	q
		mm	mm	mm	mm	mm	mm	mm	mm	mm	kN/Ibf	kN	kg/m
40HP	08AHP	12.7	7.95	7.85	5.63	4	16.5	17.6	12	1.5	11/2500	12.2	0.54
	08BHP	12.7	8.51	7.75	6.38	4.5	16.4	17.6	11.8	1.5	11.1/2523	12.1	0.52
50HP	10AHP	15.875	10.16	9.4	7.03	5.13	20.7	21.9	15.09	2.03	20/4545	22.6	0.91
	10BHP	15.875	10.16	9.65	7.03	5.13	19.3	20.6	14.7	1.6	10/2272	11.5	0.86
60HP	12AHP	19.05	11.91	12.7	8.31	6	25.8	26.8	18	2.42	24/5455	26.9	1.29
	12BHP	19.05	12.07	11.68	8.09	5.75	22.8	23.8	16	1.85	14/3180	16	0.82
80HP	16AHP	25.4	15.88	15.75	11.4	8.05	32.5	33.8	24	3.25	50/11364	52	2.26
	16BHP	25.4	15.88	17.02	11.5	8.2	35.3	37	23.2	4.0/3.1	49/11136	52.2	2.26

08AHP-2	12.7	7.95	7.85	5.63	4	31	32	12	1.5				
08BHP-2	12.7	8.51	7.75	6.38	4.5	31	32	11.8	1.5				
10AHP-2	15.875	10.16	9.4	7.03	5.13	38.2	39.5	15.09	2.03				
10BHP-2	15.875	10.16	9.65	7.03	5.13	35.5	37	14.7	1.6				
12AHP-2	19.05	11.91	12.7	8.31	6	47.5	49	18	2.42				
12BHP-2	19.05	12.07	11.68	8.09	5.75	41.5	43	16	1.85				
16AHP-2	25.4	15.88	15.75	11.4	8.05	61.2	63	24	3.25				
16BHP-2	25.4	15.88	17.02	11.5	8.2	66	68	23.2	4.0/3.1				

双节距小滚珠空心链
Double pitch Hollow pin chains with small roller

C type

A type

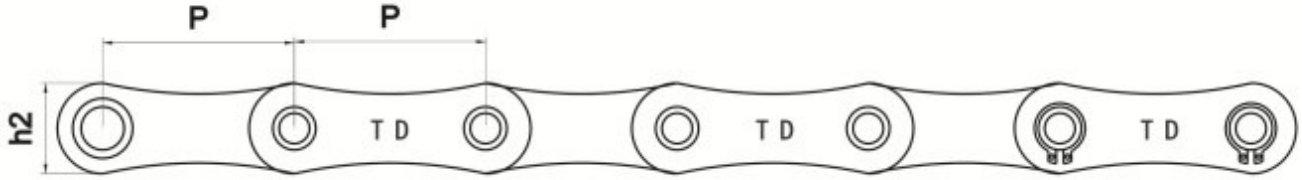

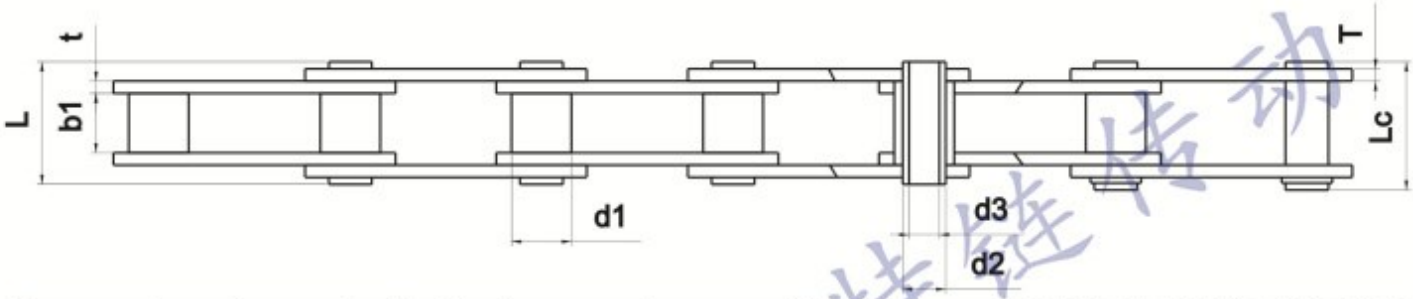

天地链号	节距 Pitch	滚柱直径 Bush diameter	内节内宽 Width between inner plates	销轴直径 Pin diameter		销轴长度 Pin length		内片宽度 Inner plate depth	链板厚度 Plate thickness	极限抗拉强度 Ultimate tensile strength	平均抗拉强度 Average tensile strength	每米重量 Weight per meter
Chain No.	P	d1 max	b1 min	d2 max	d3 min	L max	Lc max	h2 max	t/T max	Q min	Q0	q
	mm	mm	mm	mm	mm	mm	mm	mm	mm	kN/lbf	kN	kg/m
C2040HP	25.4	7.95	7.85	5.63	4	16.5	17.6	11.8	1.5	11/2500	12.6	0.46
A2040HP										10.5/2354	12.1	0.44
2040FPF1					M4					9/2045	9.9	0.44
C2050HP	31.75	10.16	9.4	7.03	5.12	20.5	21.8	15	2.03	20.4/4636	22.8	0.76
A2050HP										19.8/4326	21.5	0.73
C2060HP	38.1	11.91	12.7	8.31	6	25.8	26.8	17	2.42	24/5455	27.1	1.02
A2060HP										23/5100	26.3	0.98
C2080HP	50.8	15.88	15.75	11.4	8.05	32.5	33.8	24	3.25	50/11364	52	1.81
A2080HP										48.3/10753	51.2	1.75
C2100HP-F1	63.5	15.88	15.75	11	8.05	32.5	33.8	24	3.25	50/11364	52	
#P76.2HB	76.2	45	22	16	11	44	48	30	4	-	-	-
#P101.6HB	101.6	30	15	13.5	8.5	31	33	25	3	-	-	-

双节距大滚珠空心链
Double pitch Hollow pin chains with big roller

C type

A type

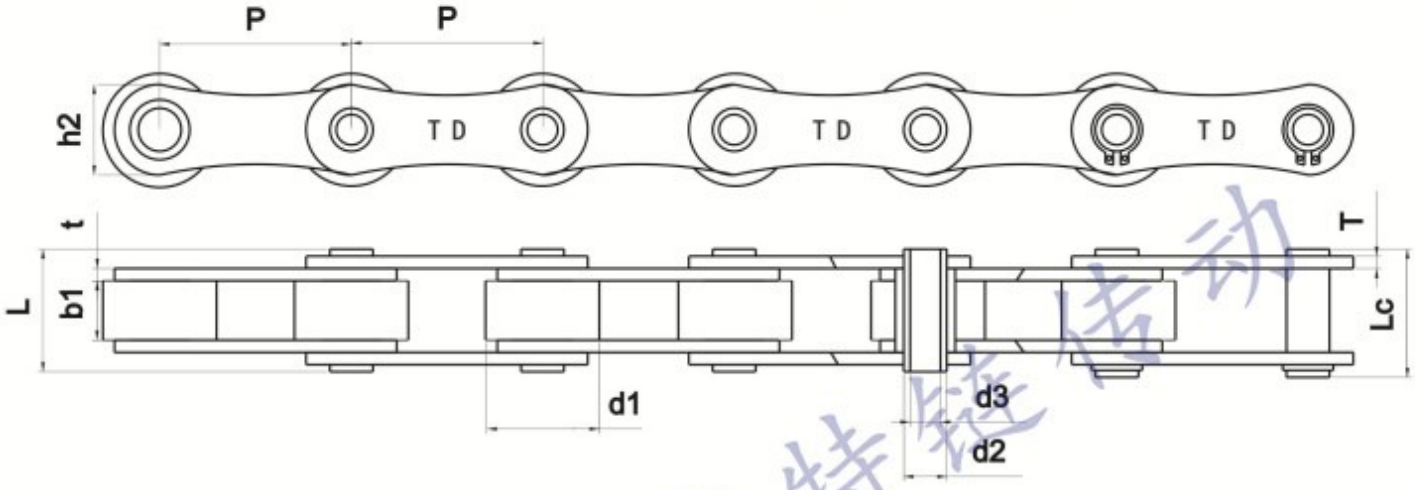

天地链号	节距 Pitch	滚柱直径 Bush diameter	内节内宽 Width between inner plates	销轴直径 Pin diameter		销轴长度 Pin length		内片宽度 Inner plate depth	链板厚度 Plate thickness	极限抗拉强度 Ultimate tensile strength	平均抗拉强度 Average tensile strength	每米重量 Weight per meter
Chain No.	P	d1 max	b1 min	d2 max	d3 min	L max	Lc max	h2 max	t/T max	Q min	Q0	q
	mm	mm	mm	mm	mm	mm	mm	mm	mm	kN/Ibf	kN	kg/m
C2042HP	25.4	15.88	7.85	5.63	4	16.5	17.6	11.8	1.5	11/2500	12.6	0.78
A2042HP										10.5/2354	12.1	0.76
C2052HP	31.75	19.05	9.53	7.03	5.12	20.5	21.8	15	2.03	20.4/4636	22.8	1.25
A2052HP										19.8/4326	21.5	1.22
C2062HP	38.1	22.23	12.7	8.31	6	25.8	26.8	17	2.42	24/5455	27.1	1.72
A2062HP										23/5100	26.3	1.68
C2082HP	50.8	28.58	15.75	11.4	8.05	32.5	33.8	24	3.25	50/11364	52	2.82
A2082HP										48.3/10753	51.2	2.76
C2102HP-F1	63.5	28.58	15.75	11	8.05	32.5	33.8	24	3.25	50/11364	52	

短节距弯板链
Short pitch conveyor chains with attachments

单侧 A-1
Unilateral

双侧 K-1
Bilateral

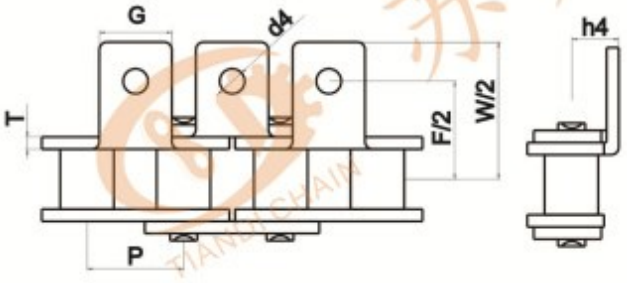

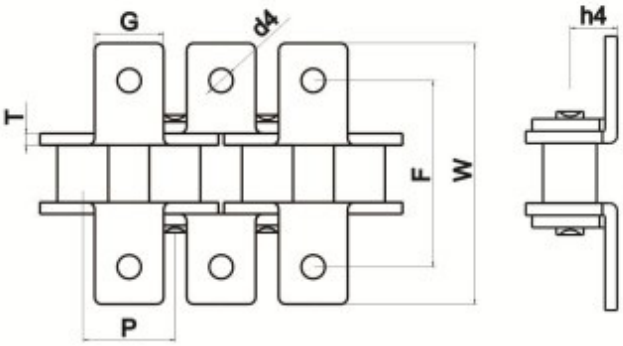

型号 Chain No.	天地链号 Chain No.	P mm	G mm	F mm	W mm	T mm	h4 mm	d4 mm
25	04C	6.35	5.6	13.8	23.2	0.8	4.3	3.4
35	06C	9.525	7.9	19	28.6	1.3	6.35	3.4
40	08A	12.7	9.5	25.4	35.2	1.5	7.9	3.4
41	085	12.7	9.5	24	33.4	1.3	6.9	3.6
50	10A	15.875	12.7	31.75	46.2	2.03	10.3	5.5
60	12A	19.05	15.9	38.1	55.6	2.42	11.9	5.5
80	16A	25.4	19.1	50.8	64.8	3.25	15.9	6.8
100	20A	31.75	25.4	63.5	89.8	4	19.8	9.2
120	24A	38.1	28.6	76.2	108.5	4.8	23	9.8
140	28A	44.45	34.9	88.9	123	5.6	28.6	11.4
160	32A	50.8	38.1	101.6	142.8	6.4	31.75	13.1
200	40A	63.5	50.8	127	179	8	42.88	16.3
	06B	9.525	8	19.04	27	1.3	6.5	3.5
	08B	12.7	9.5	25.4	36.4	1.6	8.9	4.5
	10B	15.875	14.3	31.75	44.6	1.7	10.31	5.3
	12B	19.05	16	38.1	52.4	1.85	13.46	6.4
	16B	25.4	19.1	50.8	72.6	3.1	15.88	6.4
	20B	31.75	35	63.5	100.5	3.5	19.8	9
	24B	38.1	30	76.2	108.4	4.8	26.67	10.5
	28B	44.45	35	88.9	123	6	28.58	13.1
	32B	50.8	38.1	101.6	142.8	6	31.75	13.1

短节距弯板链
Short pitch conveyor chains with attachments

单侧 A-1
Unilateral

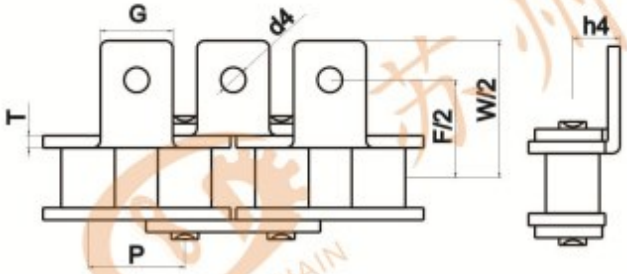

双侧 K-1
Bilateral

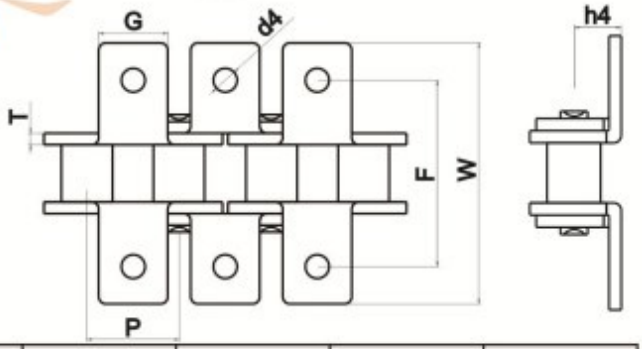

型号 Chain No.	天地链号 Chain No.	P	G	F	W	T	h4	d4
		mm	mm	mm	mm	mm	mm	mm
*06B-F4-2		9.525	10	39.32	49.5	1.3	8.9	4.5
06B-F8		9.525	14	29.2	45.2	2.4	7.6	4
C08A-F1		12.7	9.65	41.3	50.6	1.5	9.15	4
08A-F1		12.7	12	29.2	42.1	2.5	9.5	3.5
08A-F2		12.7	20	29	41.6	2	27.7	3.3
08B-F6		12.7	9.5	25.4	36.4	1.5	8.9	3.3
08B-F10		12.7	18	28	40	1.5	8	7.2
08B-F12		12.7	12.5	26	37.8	1.5	10	4.4
08B-F13		12.7	12.7	32.2	40.2	1.5	8.9	3.4
08B-F15		12.7	12.7	27.2	38.4	1.5	8.9	8.3
08B-F16		12.7	18	26.9	38.9	1.5	7.9	4
08B-F19		12.7	9.5	58	68	1.5	8	5.5
081		12.7	10	27.3	47.3	1	10	5
10A-F1		15.875	14	31.75	44.8	2	11	5.3
10A-F6		15.875	20	31.75	49	2	10.3	6.2
10A-F7		15.875	14.3	31.75	39.5	2	13.9	5.3
10A-F8		15.875	20	30.8	46	2	10.9	5.2
10A-F10		15.875	14.3	36	46.4	2	10.3	6.1
12A-F2		19.05	15.9	38.1	55.6	2.4	11.9	5
12A-F3		19.05	20	38.1	55.6	2.4	28	3.3
12A-F4		19.05	15.9	38.1	55.6	2.4	27.5	5.5
12A-F5		19.05	19	38.1	55.6	2.4	22.2	5.5
12A-F6		19.05	15.9	38.1	55.6	2.4	11.9	6.5
16A-F2		25.4	16	50.8	72.8	3.2	15.9	8
16A-F3		25.4	24	50.8	82.2	3.2	15.9	9
16A-F6		25.4	20	91.6	108	2.4	33.5	6.4
16B-F2		25.4	20	50.8	71.8	3.2	20.8	9
16B-F3		25.4	19.1	50.8	70	3.2	15.9	9

* 内片inner plate

短节距弯板链
Short pitch conveyor chains with attachments

单侧 SA-1
Unilateral

双侧 SK-1
Bilateral

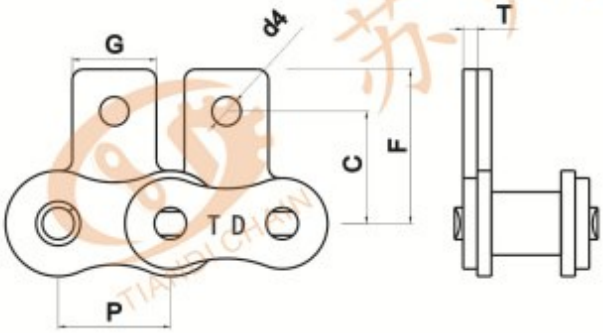

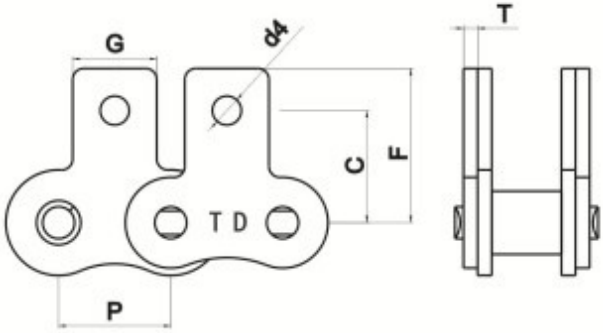

型号 Chain No.	天地链号 Chain No.	P mm	G mm	C mm	F mm	T mm	d4 mm
25	04C	6.35	5.6	7.95	11.7	0.8	3.4
35	06C	9.525	7.9	9.5	14.55	1.3	3.4
40	08A	12.7	9.5	12.7	19.05	1.5	3.4
41	085	12.7	9.5	11.85	16.55	1.3	3.6
50	10A	15.875	12.7	15.9	25.25	2.03	5.5
60	12A	19.05	15.9	18.3	29.33	2.42	5.5
80	16A	25.4	19.1	24.6	34.7	3.25	6.8
100	20A	31.75	25.4	31.8	43.3	4	9.2
120	24A	38.1	28.6	36.5	51.6	4.8	9.8
140	28A	44.45	34.9	44.5	62	5.6	11.4
160	32A	50.8	38.1	50.8	69.85	6.4	13.1
200	40A	63.5	50.8	63.5	88.9	8	16.3
	06B	9.525	8	9.52	13.5	1.3	3.5
	08B	12.7	9.5	13.35	18.9	1.6	4.3
	10B	15.875	14.3	16.5	22.95	1.7	5.3
	12B	19.05	16	21.45	28.6	1.85	6.4
	16B	25.4	19.1	23.15	34	3.1	6.4
	20B	31.75	35	30.5	45.7	3.5	9
	24B	38.1	36	36	61.5	4.8	10.5

短节距弯板链
Short pitch conveyor chains with attachments

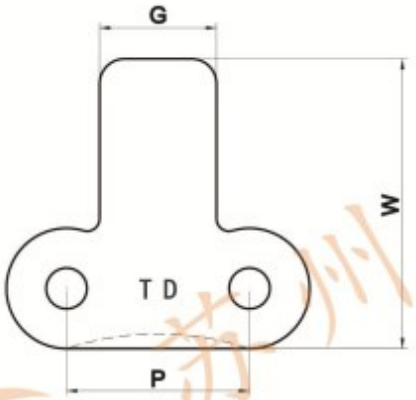

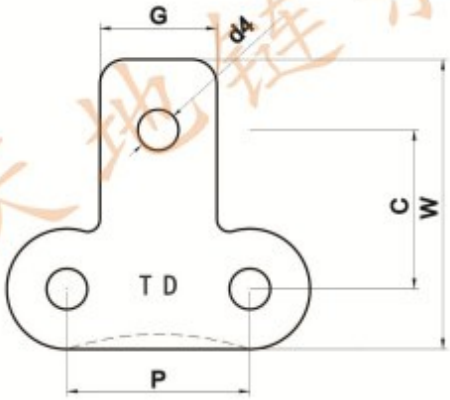

天地链号 Chain No.	P mm	G mm	d mm	C mm	W mm
*06B-F1	9.525	8	-	-	17.3
06B-F1	9.525	8	-	-	17.3
*06B-F2	9.525	6	-	-	20
06B-F3	9.525	8	-	-	20
*06B-F4	9.525	10	4.5	18.5	27.6
06B-F6	9.525	9	4	9.5	17.6
06B-F7	9.525	6	-	16.1	25
06B-F8	9.525	14	4	14.4	26.5
06B-F9	9.525	9	5	10.5	20.8
06B-F10	9.525	3.8	-	-	17.1
06B-F11	9.525	8	3.2	7.5	14.2
06B-F12	9.525	8	5.1	10.5	18.5
C08A-F1	12.7	9.65	4	14.35	25.25
*C08A-F1	12.7	9.65	4	16	26.9
08A-F1	12.7	12	3.5	14.2	25.6
08A-F2	12.7	20	3.3	32.5	43.8
08A-F5	12.7	9.5	6	12.7	22.9
08B-F6	12.7	9.5	3.3	13.35	23.7
08B-F9	12.7	9.5	-	-	20
08B-F10	12.7	18	7.2	14	25.3
08B-F11	12.7	12	-	-	40.4
08B-F12	12.7	12.5	4.4	15.1	26.4
08B-F13	12.7	12.7	3.4	17.2	26.85
08B-F15	12.7	12.7	8.3	14.7	25.8
08B-F16	12.7	18	3.96	12.8	24
**08B-F18	12.7	15	-	-	16.2
08B-F19	12.7	9.5	5.5	28.8	39
C08B-F1	12.7	9.5	-	-	30.1

天地链号 Chain No.	P mm	G mm	d mm	C mm	W mm
*081	12.7	10	5	19.4	34.25
10A-F1	15.875	14	5.3	17.1	30
10A-F5	15.875	16	7.2	13	27.5
10A-F6	15.875	20	6.2	16	31
10A-F7	15.875	14.3	5.3	20	30.23
10A-F8	15.875	20	5.2	16.2	30
10A-F9	15.875	12.7	-	-	22.6
10A-F10	15.875	14.3	6.1	18	29.7
*10A-F10	15.875	14.3	6.1	20	32.7
12A-F2	19.05	15.9	5	18.6	35.15
12A-F3	19.05	20	3.3	35.5	51.2
12A-F4	19.05	15.9	5.5	34.4	50.8
12A-F5	19.05	19	5.5	29	45.4
12A-F6	19.05	15.9	6.5	18.7	35
16A-F2	25.4	16	8	25.1	42.45
16A-F3	25.4	24	9	25.1	47.1
16A-F6	25.4	20	6.4	62	80.2
16B-F1	25.4	19.1	6.4	23.7	45.1
16B-F2	25.4	20	9	28.9	49.4
16B-F3	25.4	19.1	9	24.4	43.8

* 内片inner plate

短节距弯板链
Short pitch conveyor chains with attachments

单侧 WA-1 WA-2
Unilateral

双侧 WK-1 WK-2
Bilateral

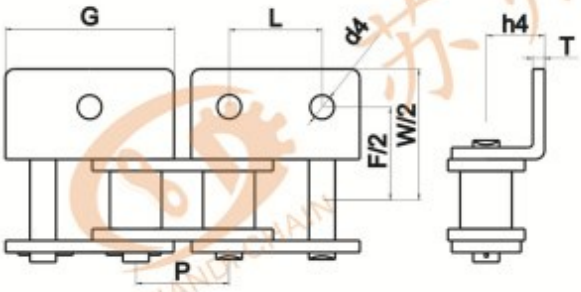

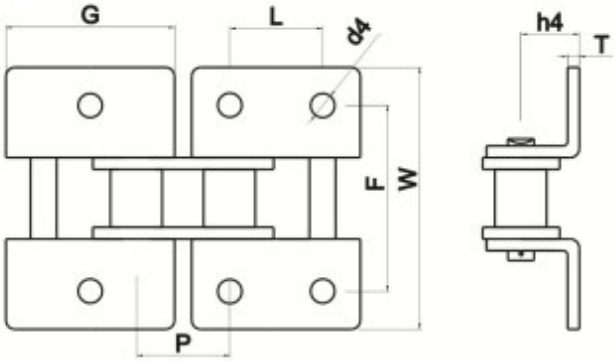

型号 Chain No.	天地链号 Chain No.	P	G	L	F	W	T	h4	d4
		mm	mm	mm	mm	mm	mm	mm	mm
25	04C	6.35	11.41	6.35	13.8	23.2	0.8	4.3	3.4
35	06C	9.525	17.32	9.525	19	28.6	1.3	6.35	2.8
40	08A	12.7	23	12.7	25.4	35.6	1.5	7.9	3.4
41	085	12.7	22.3	12.7	24	35	1.3	7.2	4.85
50	10A	15.875	28.8	15.875	31.75	46.8	2.03	10.3	5.5
60	12A	19.05	34.65	19.05	38.1	56.4	2.42	11.9	5.5
80	16A	25.4	45.9	25.4	50.8	73.2	3.25	15.9	6.8
100	20A	31.75	57.65	31.75	63.5	89.8	4	19.8	9.2
120	24A	38.1	69.3	38.1	76.2	108.8	4.8	23	9.8
140	28A	44.45	80.45	44.45	88.9	123	5.6	28.6	11.4
160	32A	50.8	92	50.8	101.6	142.8	6.4	31.75	13.1
200	40A	63.5	115.5	63.5	127	179	8	42.88	16.3
	06B	9.525	17.72	9.525	19.04	27	1.3	6.5	3.5
	08B	12.7	24	12.7	25.4	36.4	1.6	8.9	4.3
	10B	15.875	29.58	15.875	31.8	44.6	1.7	10.31	5.3
	12B	19.05	34.05	19.05	38.1	52.4	1.85	13.46	6.4
	16B	25.4	46.4	25.4	50.8	72.6	3.1	15.88	6.4
	20B	31.75	58.1	31.75	63	100.5	3.5	19.8	9
	24B	38.1	71.3	38.1	76.2	108.4	4.8	26.67	10.5
	28B	44.45	81.1	44.45	88.9	123	6	28.58	13.1
	32B	50.8	92.8	50.8	101.6	142.8	6	31.75	13.1

* 内片inner plate

短节距弯板链
Short pitch conveyor chains with attachments

单侧 WA-1 WA-2
Unilateral

双侧 WK-1 WK-2
Bilateral

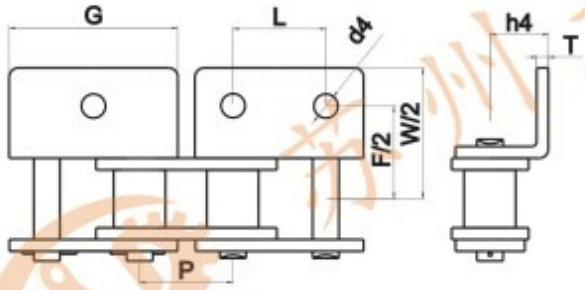

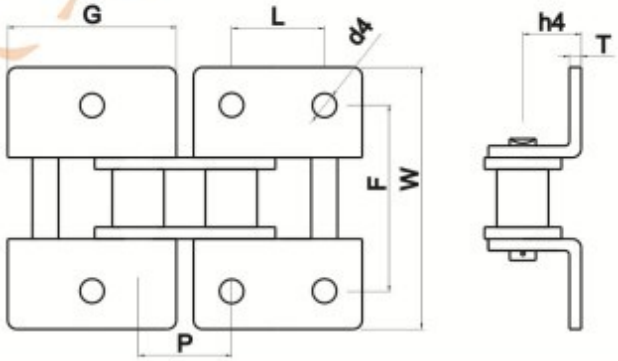

型号 Chain No.	天地链号 Chain No.	P	G	L	F	W	T	h4	d4
		mm	mm	mm	mm	mm	mm	mm	mm
06B-F5		9.525	17.4	-	19	30	1.3	7.9	4.5
08A-F3		12.7	23.5	12.7	25.4	36.4	1.5	12	4.3
08A-F4-3d4		12.7	23	6.35	25.4	37.6	1.5	7.9	3.4
08B-F1		12.7	23.2	12.7	25.4	36	1.6	14.9	4.5
*08B-F2		12.7	25.2	-	25.4	36	1.5	10.2	7
08B-F3		12.7	23.4	-	25.4	37.6	1.5	7.2	4.5
08B-F4		12.7	23	10	25.4	34.6	1.5	8.9	4.3
08B-F5		12.7	24	12.7	25.4	37.6	1.5	12.1	4.2
08B-F8		12.7	24.5	12.7	25.4	39.2	1.5	8.9	4.5
08B-F14		12.7	23.4	12.7	25.4	37.6	1.5	7.9	4.4
08B-F17		12.7	25	9	30.9	43.5	1.5	8.9	6.8/3
08B-F20		12.7	22.7	12.7	27	37.2	1.5	9	6.5
10A-F2		15.875	28.8	-	31.75	46.4	2	10.3	6
10A-F3		15.875	24	15.875	31.75	47.3	2	9.6	3.5
*10A-F4		15.875	30.6	-	31.75	59.6	2	15.7	8
12A-F1		19.05	34.6	25	38.1	58.5	2.4	23.4	5.5
12A-F7		19.05	32	15.875	38.1	50.1	2.4	11.9	6.5
12A-F8		19.05	34.5	19.05	38.1	56.9	2.4	15.9	6
12A-F10		19.05	34.5	15	40	60	2.4	12	6.5
12A-F11		19.05	34.65	25	45.8	61.8	2.4	12.9	5.5
12B-F2		19.05	37	-	38.1	50.5	1.85	11.9	6
12B-F3		19.05	32	22	41.8	56.1	1.85	16.7	6.3
12B-F4		19.05	35	19	34.5	51.5	1.85	10	6.5
12B-F5		19.05	35.6	19	38.4	58.6	1.85	12	6.6
12B-F6		19.05	35.6	19	36	55.4	1.85	12	6.6
16A-F1		25.4	46	25.4	50.8	77	3.2	17.4	6.5
16A-F4		25.4	46	25.4	50.8	77.4	3.2	19.2	9
20A-F1		31.75	42.2	31.65	58	73	4	27.5	6

* 内片inner plate

短节距弯板链
Short pitch conveyor chains with attachments

单侧 SWA-1SWA-2
Unilateral

双侧 SWK-1SWK-2
Bilateral

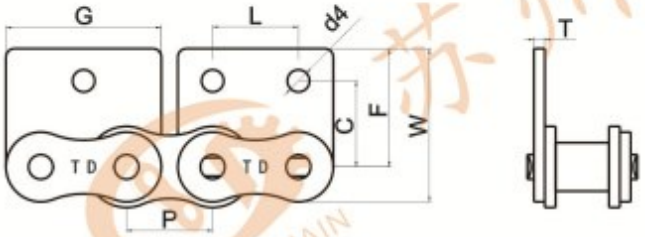

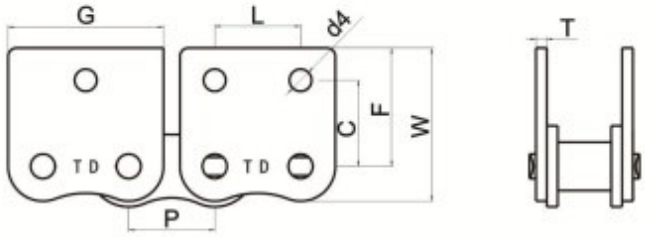

型号 Chain No.	天地链号 Chain No.	P	G	L	C	F	d4	W
		mm	mm	mm	mm	mm	mm	mm
25	04C	6.35	11.41	6.35	7.95	11.7	3.4	14.2
35	06C	9.525	17.32	9.525	9.5	14.55	2.8	18.4
40	08A	12.7	23	12.7	12.7	17.4	3.4	22.6
41	085	12.7	22.3	12.7	11.85	16.55	4.85	21.4
50	10A	15.875	28.8	15.875	15.9	23.05	5.5	29.5
60	12A	19.05	34.65	19.05	18.3	26.86	5.5	34.7
80	16A	25.4	45.9	25.4	24.6	35.45	6.8	45.7
100	20A	31.75	57.65	31.75	31.8	44	9.2	57.0
120	24A	38.1	69.3	38.1	36.5	51.6	9.8	67.2
140	28A	44.45	80.45	44.45	44.5	62	11.4	80.0
160	32A	50.8	92	50.8	50.8	69.85	13.1	90.5
200	40A	63.5	115.5	63.5	63.5	88.9	16.3	114.9
	06B	9.525	17.72	9.525	9.52	13.5	3.5	17.6
	08B	12.7	24	12.7	13.35	18.9	4.3	24.6
	10B	15.875	29.58	15.875	16.5	22.95	5.3	29.8
	12B	19.05	34.05	19.05	21.45	28.6	6.4	36.1
	16B	25.4	46.4	25.4	23.15	34	6.4	44.5
	20B	31.75	58.1	31.75	30.5	45.7	9	58.9
	24B	38.1	71.3	38.1	42.7	61.5	10.5	78.1

短节距弯板链
Short pitch conveyor chains with attachments

单侧 SWA-1SWA-2
Unilateral

双侧 SWK-1SWK-2
Bilateral

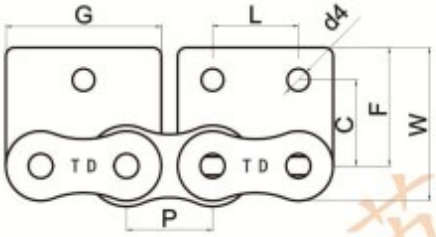

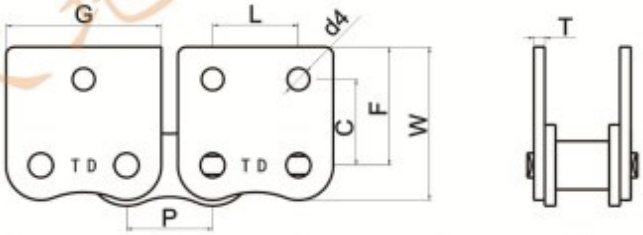

型号 Chain No.	天地链号 Chain No.	P	G	L	C	F	d4	W
		mm	mm	mm	mm	mm	mm	mm
06C-F1		9.525	17	-	-	20.0	-	23.7
**06C-F2		9.525	17.74	-	-	9.0	-	13.15
06B-F5		9.525	17.4	-	11.4	16.9	4.5	20.8
06B-F13		9.525	17.6	9.5	9.5	12.9	3.5	16.9
08A-F3		12.7	23.5	12.7	17	22.5	4.3	27.9
08A-F4-3d4		12.7	23	6.35	13	19.1	3.4	24.2
08B-F1		12.7	23.2	12.7	20	25.1	4.5	30.3
*08B-F2		12.7	25.2	-	16.6	21.9	7	28.1
08B-F3		12.7	23.4	-	12.9	19.0	4.5	24.3
08B-F4		12.7	23	10	13.5	18.1	4.3	23.2
08B-F5		12.7	24	12.7	17	23.1	4.2	28.7
*08B-F7		12.7	24.5	-	-	16.3	-	22.2
08B-F8		12.7	24.5	12.7	14	20.9	4.5	26.8
08B-F14		12.7	23.4	12.7	13	19.1	4.4	24.4
08B-F20		12.7	22.7	12.7	13.8	18.9	6.5	23.9
10A-F2		15.875	28.8	-	16.6	23.9	6	30.4
10A-F3		15.875	24	15.875	15.5	23.3	3.5	27.4
*10A-F4		15.875	30.6	-	23.7	37.6	8	45
12A-F1		19.05	34.6	25	30	40.2	5.5	48
12A-F7		19.05	32	15.875	17.5	23.5	6.5	30
12A-F8		19.05	34.5	19.05	22.3	31.7	6	39.4
12A-F9		19.05	34.5	20	18.3	27.3	6	35.1
12A-F11		19.05	34.65	25	22.3	30.3	5.5	45.9
12B-F2		19.05	37	-	20.3	26.5	6	35.5
12B-F4		19.05	35	19	15.5	24.0	6.5	31.5
12B-F5		19.05	35.6	19	20	30.1	6.6	38.1
12B-F6		19.05	35.6	19	18.8	28.5	6.6	36.35
16A-F1		25.4	46	25.4	27	40.1	6.5	50.4
16A-F4		25.4	46	25.4	28.8	42.1	9	52.4
16A-F5		25.4	46.2	25	27	40.0	6.5	50.5
16B-F4		25.4	45.3	-	26.5	34.5	5.2	44.5
20A-F1		31.75	42.2	31.65	40.5	47.8	6	60.75

* 内片inner plate

双节距弯板链
Double pitch chains with attachments

A-1

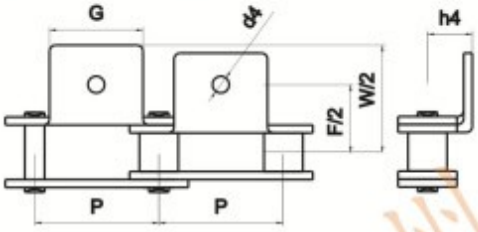

K-1

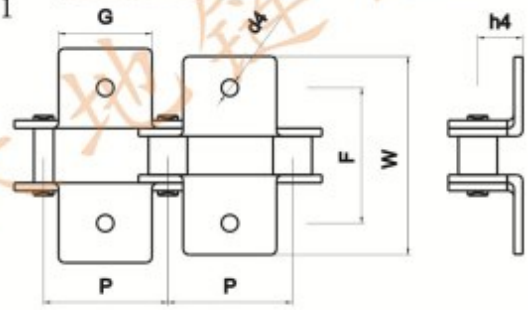

A-2

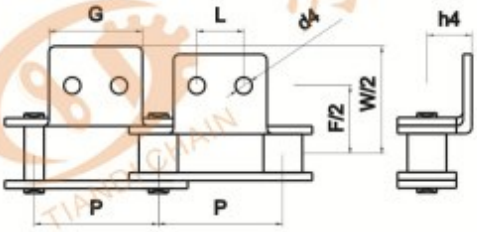

K-2

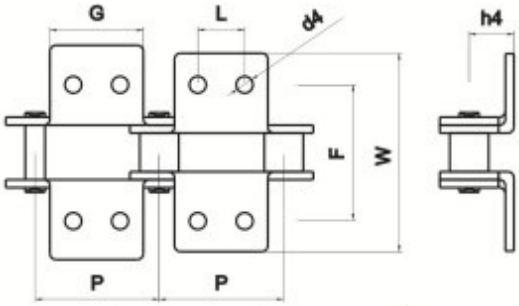

型号 Chain No.	天地链号 Chain No.	P	G	L	F	W	h4	d4
		mm	mm	mm	mm	mm	mm	mm
C208A	C2040	25.4	19.1	9.5	25.4	39.6	9.1	3.4
C208AL	C2042							
C208B		25.4	23.2	12.7	25.4	39.6	9.1	4.5
C208BL								
C210A	C2050	31.75	23.8	11.9	31.8	49	11.1	5.5
C210AL	C2052							
C212A	C2060	38.1	28.6	14.3	42.9	67.8	14.7	5.5
C212AL	C2062							
C212AH	C2060H	38.1	28.6	14.3	42.9	67.8	14.7	5.5
C212AHL	C2062H							
C216A	C2080	50.8	38.1	19.1	55.6	87.8	19.1	6.8
C216AL	C2082							
C216AH	C2080H	50.8	38.1	19.1	55.6	87.8	19.1	6.8
C216AHL	C2082H							
C220A	C2100	63.5	47.6	23.8	66.6	107.5	23.4	9.2
C220AL	C2102							
C220AH	C2100H	63.5	47.6	23.8	66.6	107.5	23.4	9.2
C220AHL	C2102H							
C224A	C2120	76.2	57.2	28.6	79.3	121.4	27.8	11
C224AL	C2122							
C224AH	C2120H	76.2	57.2	28.6	79.3	121.4	27.8	11
C224AHL	C2122H							
C232A	C2160	101.6	76.2	38.1	104.7	151.6	36.5	13.1
C232AL	C2162							
C232AH	C2160H	101.6	76.2	38.1	104.7	151.6	36.5	13.1
C232AHL	C2162H							

A208B-F2	25.4	24	14	26	38.6	18.6	3.2
C2050-F2	31.75	23.8	11.9	31.8	49	11.1	4.3
C2080-F2	50.8	40	20	52.2	82.5	30	9
C2100HF1	63.5	91.5	-	-	120	33	13

双节距弯板链
Double pitch chains with attachments

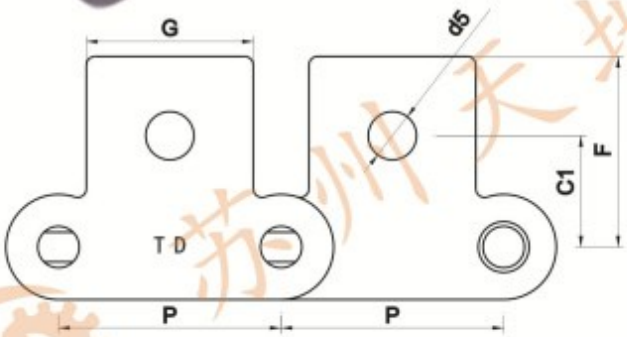

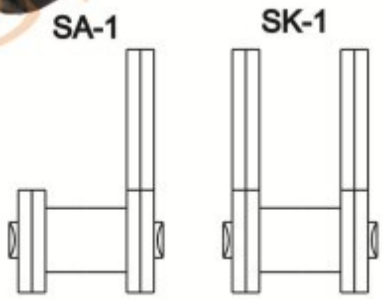

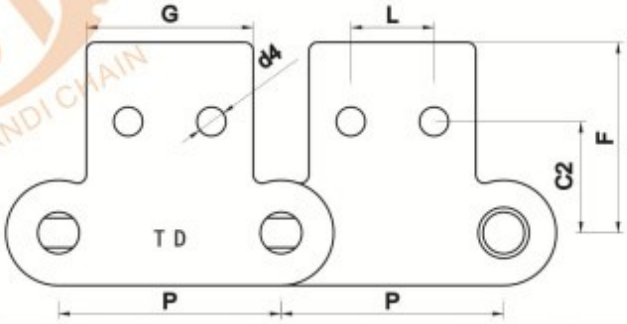

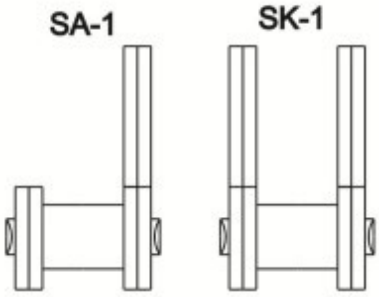

型号 Chain No.	天地链号 Chain No.	P mm	G mm	L mm	C1 mm	C2 mm	F mm	d4 mm	d5 mm
C208A	C2040	25.4	19.1	9.5	11.1	13.5	20.5	3.4	5.5
C208AL	C2042								
C208B		25.4	23.2	12.7	11.1	13.5	20.5	4.5	5.5
C208BL									
C210A	C2050	31.75	23.8	11.9	14.3	15.9	25	5.5	6.6
C210AL	C2052								
C212A	C2060	38.1	28.6	14.3	17.5	19.1	32.9	5.5	9.2
C212AL	C2062								
C212AH	C2060H	38.1	28.6	14.3	17.5	19.1	32.9	5.5	9.2
C212AHL	C2062H								
C216A	C2080	50.8	38.1	19.1	22.2	25.4	43.5	6.6	11
C216AL	C2082								
C216AH	C2080H	50.8	37.1	19.1	22.2	25.4	43.5	6.6	11
C216AHL	C2082H								
C220A	C2100	63.5	47.6	23.8	28.6	31.8	50.4	8.4	13
C220AL	C2102								
C220AH	C2100H	63.5	47.6	23.8	28.6	31.8	50.4	8.4	13
C220AHL	C2102H								

A208B-F1	25.4	24	14	-	15	21.2	4.2	-
A208B-F2	25.4	24	14	-	22.85	29.15	3.2	-
C2050-F3	31.75	46.5	-	-	-	22.8	-	-
C2060-F1	38.1	28.5	-	39	-	54	-	6
C2080-F1	50.8	40	-	27.2	-	38	-	7.9
C2080-F2	50.8	40	20	-	38.6	53.5	9	-
C2080-F3	50.8	38.1	19.1	-	34.5	41.5	7	-
C2080-F4	50.8	40	19	-	27/44	52.8	3-8.5	-
C2080-F5	50.8	70	40	-	43.6	58.6	8	-

内弯板链
Conveyor chains with reverse attachments

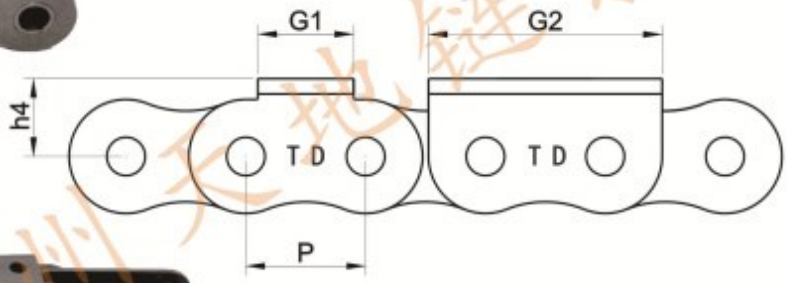

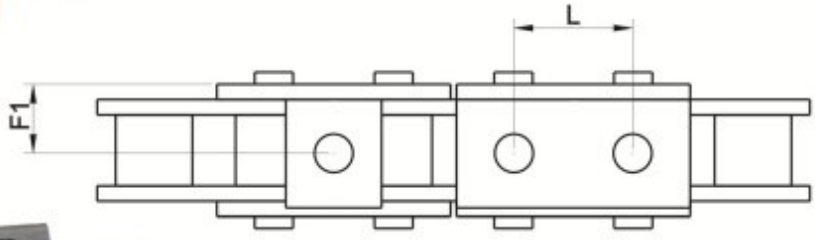

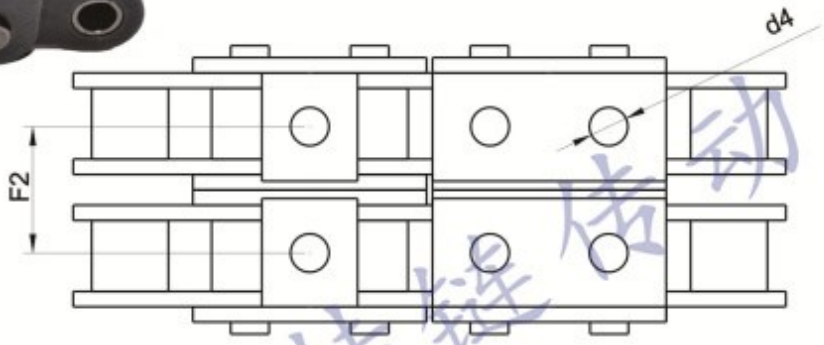

型号 Chain No.	天地链号 Chain No.	P mm	G1 mm	G2 mm	F1 mm	F2 mm	L mm	h4 mm	d4 mm
35	06C	9.525	7.9	17.32	5.8	8.6	9.525	6.35	3.4
40	08A	12.7	9.5	23	7.2	13.8	12.7	7.9	3.4
50	10A	15.875	12.7	28.8	9	17.5	15.875	10.3	5.5
10A-F8		15.875	-	20	-	17.5	-	10.9	5.2
60	12A	19.05	15.9	34.65	10.3	24.1	19.05	11.9	5.5
80	16A	25.4	19.1	45.9	14.3	28.8	25.4	15.9	6.8
100	20A	31.75	25.4	57.65	18.2	33.9	31.75	19.8	9.2
	06B	9.525	8	17.72	5.3	10.5	9.525	6.5	3.5
	08B	12.7	9.5	24	7.2	13.8	12.7	8.9	4.5
	16B	25.4	-	45	-	38	-	18	5.2

热合机链
Heat sealing machine chains

A Type

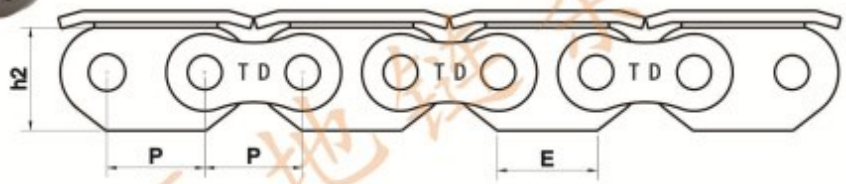

B Type

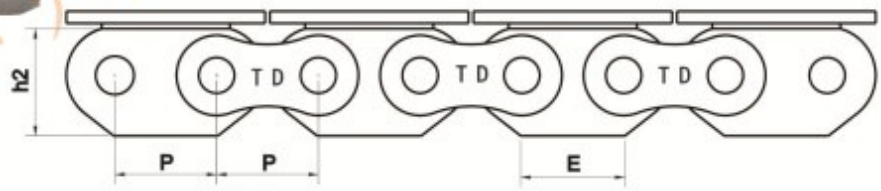

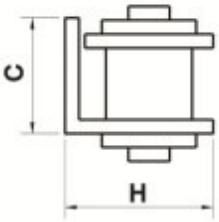

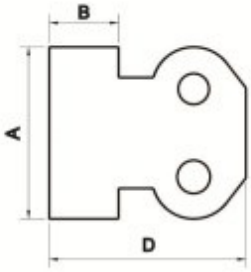

天地链号 Chain No.	P	A	B	C	D	E	H	h2
	mm	mm	mm	mm	mm	mm	mm	mm
08A	12.7	22.6	10	11.5	28	13	16.7	14
08B	12.7	24.8	10	12.5	28.4	13	16.1	13.6

08A-F1

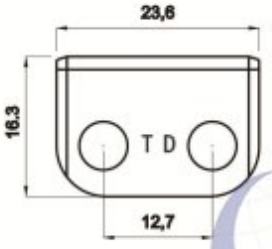

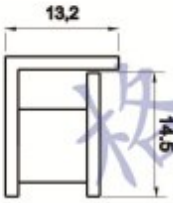

08A-F2

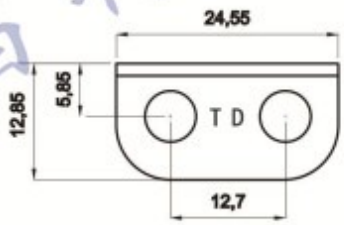

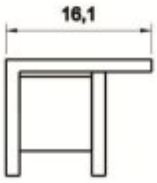

短节距长销链
Short pitch conveyor chain with extended pins

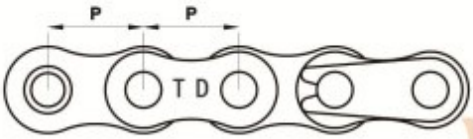

单侧长销 D1
Unilateral

双侧长销 E1
Bilateral

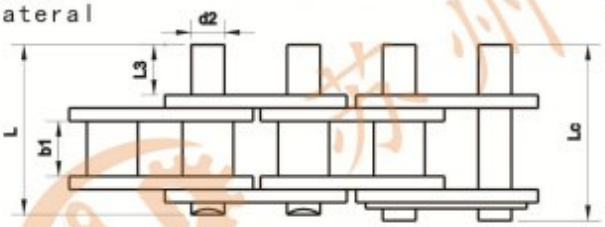

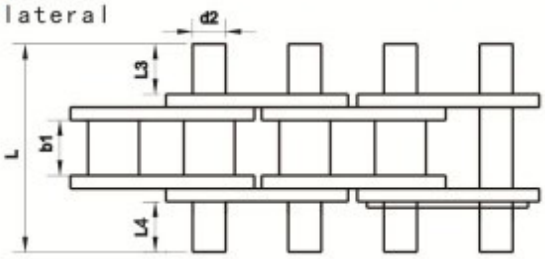

每两节一根长销 D2
each two links one extended pin

每三节一根长销 D3
each three links one extended pin

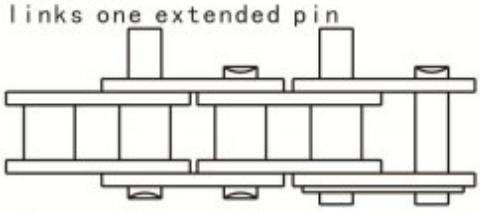

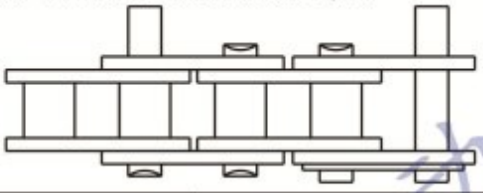

型号 Chain No.	天地链号 Chain No.	P mm	b1 mm	d2 mm	D Type L3 mm	D Type L mm	D Type Lc mm	E Type L3 mm	E Type L4 mm	E Type L mm
35	06C	9.525	4.77	3.58	X	11.3+X	12.1+X	X	Y	10+X+Y
40	08A	12.7	7.85	3.96	X	15.6+X	16.7+X	X	Y	13.8+X+Y
50	10A	15.875	9.4	5.08	X	19.4+X	21.2+X	X	Y	17.4+X+Y
60	12A	19.05	12.57	5.94	X	24.3+X	26.3+X	X	Y	22.3+X+Y
80	16A	25.4	15.75	7.92	X	31.2+X	34.2+X	X	Y	28.8+X+Y
100	20A	31.75	18.9	9.53	X	38+X	42.3+X	X	Y	35+X+Y
120	24A	38.1	25.22	11.1	X	47.8+X	51.8+X	X	Y	44.5+X+Y
140	28A	44.45	25.22	12.7	X	51.5+X	56.1+X	X	Y	47.7+X+Y
160	32A	50.8	31.55	14.27	X	61.5+X	66.3+X	X	Y	57.2+X+Y
	06B	9.525	5.72	3.28	X	11.9+X	12.9+X	X	Y	10.9+X+Y
	08B	12.7	7.75	4.45	X	15.6+X	17.1+X	X	Y	14.2+X+Y
	10B	15.875	9.65	5.08	X	18.2+X	19.6+X	X	Y	16.5+X+Y
	12B	19.05	11.68	5.72	X	21.1+X	22.8+X	X	Y	19.1+X+Y
	16B	25.4	17.02	8.28	X	33.9+X	35.2+X	X	Y	31.6+X+Y
	20B	31.75	19.56	10.19	X	38.9+X	42.6+X	X	Y	35.6+X+Y
	24B	38.1	25.4	14.63	X	50.7+X	55.1+X	X	Y	47+X+Y
	28B	44.45	30.99	15.9	X	62.1+X	66.5+X	X	Y	58+X+Y
	32B	50.8	30.99	17.81	X	62+X	67+X	X	Y	57+X+Y

X、Y可以任意值　X、Y can be any calue

短节距特殊长销链
Short pitch conveyor chain with special extended pins

开口销型 K Type

T型销型 T Type

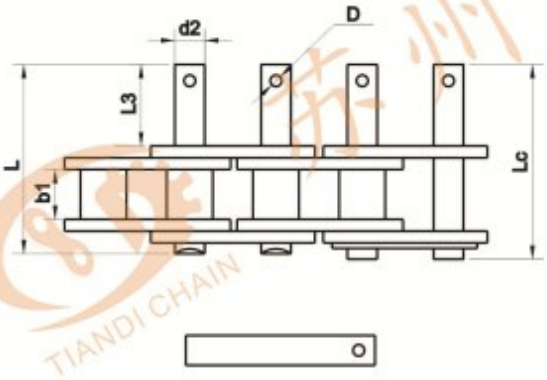

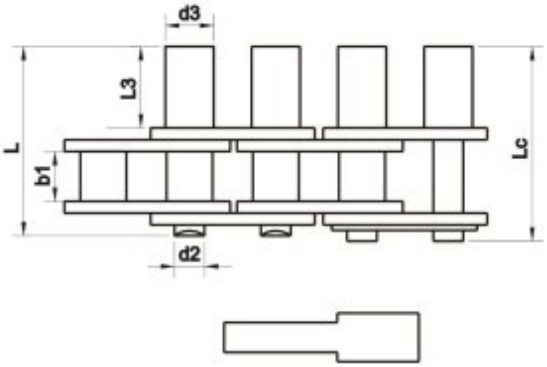

型号 Chain No.	天地链号 Chain No.	P mm	b1 mm	d2 mm	L3 mm	L mm	Lc mm	K Type D mm	T Type d3 mm
35	06C	9.525	4.77	3.58	X	11.3+X	12.1+X	1.3	Y
40	08A	12.7	7.85	3.96	X	15.6+X	16.7+X	1.5	Y
50	10A	15.875	9.4	5.08	X	19.4+X	21.2+X	1.5	Y
60	12A	19.05	12.57	5.94	X	24.3+X	26.3+X	2	Y
80	16A	25.4	15.75	7.92	X	31.2+X	34.2+X	2	Y
100	20A	31.75	18.9	9.53	X	38+X	42.3+X	2.5	Y
120	24A	38.1	25.22	11.1	X	47.8+X	51.8+X	2.5	Y
140	28A	44.45	25.22	12.7	X	51.5+X	56.1+X	3	Y
160	32A	50.8	31.55	14.27	X	61.5+X	66.3+X	3	Y
	06B	9.525	5.72	3.28	X	11.9+X	12.9+X	1.3	Y
	08B	12.7	7.75	4.45	X	15.6+X	17.1+X	1.5	Y
	10B	15.875	9.65	5.08	X	18.2+X	19.6+X	1.5	Y
	12B	19.05	11.68	5.72	X	21.1+X	22.8+X	2	Y
	16B	25.4	17.02	8.28	X	33.9+X	35.2+X	2	Y
	20B	31.75	19.56	10.19	X	38.9+X	42.6+X	2.5	Y
	24B	38.1	25.4	14.63	X	50.7+X	55.1+X	2.5	Y
	28B	44.45	30.99	15.9	X	62.1+X	66.5+X	3	Y
	32B	50.8	30.99	17.81	X	62+X	67+X	3	Y

X、Y可以任意值 X、Y can be any calue

天地链条
TD CHAIN

双节距长销链
Double pitch conveyor chain with extended pins

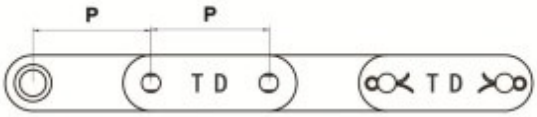

单侧长销 D1
Unilateral

双侧长销 E1
Bilateral

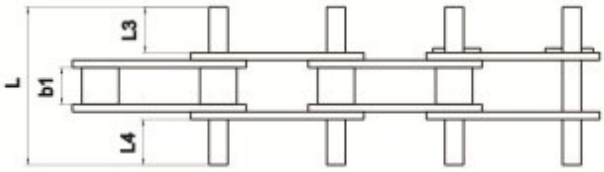

每两节一根长销 D2
each two links one extended pi

每三节一根长销 D3

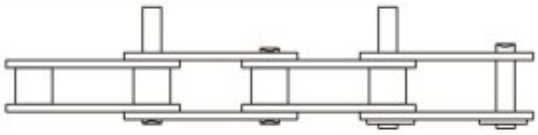

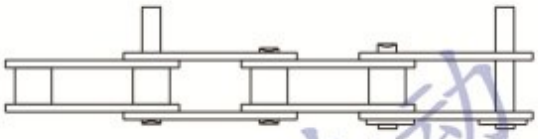

型号 Chain No.	天地链号 Chain No.	P	b1	d2	D Type			E Type		
					L3	L	Lc	L3	L4	L
		mm	mm	mm	mm	mm	mm	mm	mm	mm
C208A	C2040	25.4	7..85	3.96	X	15.6+X	16.7+X	X	Y	13.8+X+Y
C208AL	C2042									
C210A	C2050	31.75	9.4	5.08	X	19.4+X	21.2+X	X	Y	17.4+X+Y
C210AL	C2052									
C212A	C2060	38.1	12.57	5.94	X	24.3+X	26.3+X	X	Y	22.3+X+Y
C212AL	C2062									
C212AH	C2060H	38.1	12.57	5.94	X	27.7+X	29.5+X	X	Y	25.7+X+Y
C212AHL	C2062H									
C216A	C2080	50.8	15.75	7.92	X	31.2+X	34.2+X	X	Y	28.8+X+Y
C216AL	C2082									
C216AH	C2080H	50.8	15.75	7.92	X	34.4+X	35.9+X	X	Y	32+X+Y
C216AHL	C2082H									
C220A	C2100	63.5	18.9	9.53	X	38+X	42.3+X	X	Y	35+X+Y
C220AH	C2102									

X、Y可以任意值 X、Y can be any calue

双节距特殊长销链
Double pitch conveyor chain with special extended pins

开口销型 K Type

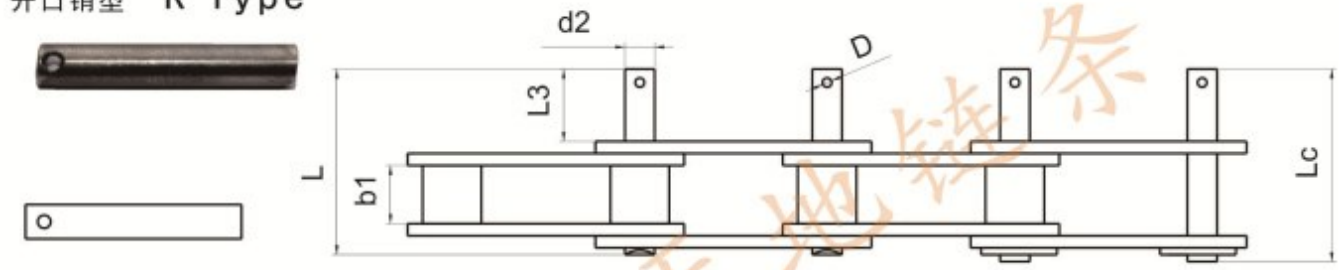

T型销型 T Type

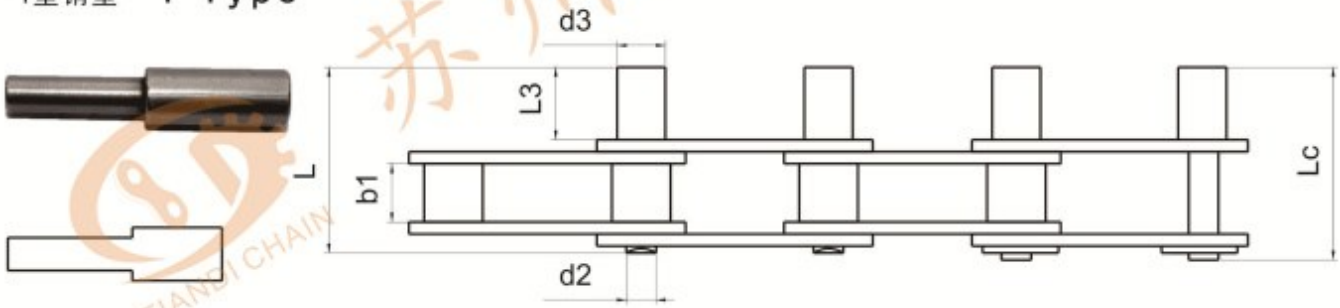

中孔长销型 F Type

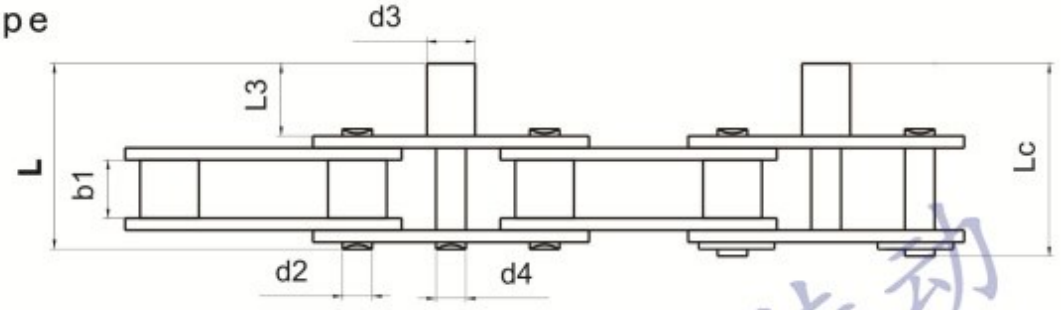

型号 Chain No.	天地链号 Chain No.	P mm	b1 mm	d2 mm	L3 mm	L mm	LC mm	K Type D mm	T Type L4 mm	F Type d3 mm	F Type d4 mm
C208A	C2040	25.4	7..85	3.96	X	15.6+X	16.7+X	1.5	Y	Z	6\7
C208AL	C2042										
C210A	C2050	31.75	9.4	5.08	X	19.4+X	21.2+X	1.5	Y	Z	7
C210AL	C2052										
C212A	C2060	38.1	12.57	5.94	X	24.3+X	26.3+X	2	Y	Z	8
C212AL	C2062										
C212AH	C2060H	38.1	12.57	5.94	X	27.7+X	29.5+X	2	Y	Z	8
C212AHL	C2062H										
C216A	C2080	50.8	15.75	7.92	X	31.2+X	34.2+X	2.5	Y	Z	10.5
C216AL	C2082										
C216AH	C2080H	50.8	15.75	7.92	X	34.4+X	35.9+X	2.5	Y	Z	10.5
C216AHL	C2082H										
C220A	C2100	63.5	18.9	9.53	X	38+X	42.3+X	3	Y	Z	10
C220AH	C2102										

X、Y、Z可以任意值，X、Y、Z can be any value

挡板链
Baffle chains

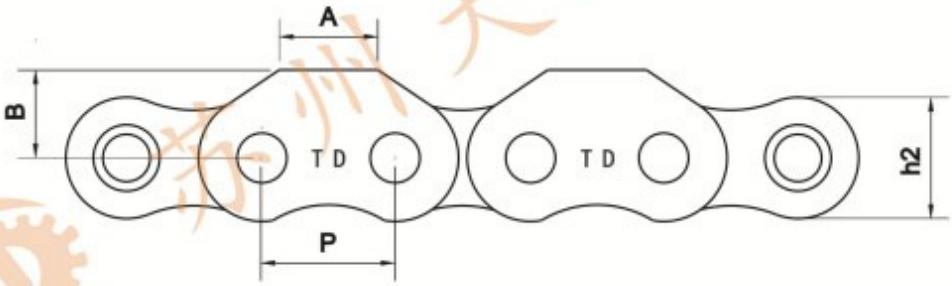

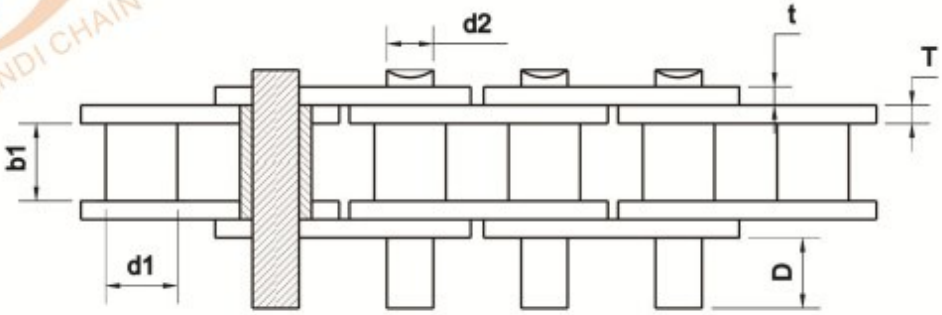

天地链号	节距 Pitch	滚柱直径 Roller diameter	内节内宽 Width between inner plates	销轴直径 Pin diameter	销轴长度 Pin length	内片宽度 Inner plate depth	链板厚度 Plate thickness	附件尺寸 Attachment size	
Chain No.	P	d1 max	b1 min	d2 max	D	h2 max	t/T max	A	B
	mm	mm	mm	mm	mm	mm	mm	mm	mm
06B-F1	9.525	6.35	5.72	3.28	X	8.2	1.3	8	6
06B-F2	9.525	6.35	5.72	3.28	X	8.2	1.3	10	6
06C	9.525	5.08	4.77	3.58	X	8.2	1.3	8	6
06C-F1中	9.525	5.08	4.77	3.58	X	8.2	1.3	7	9
08B	12.7	8.51	7.75	4.45	X	11.8	1.5	13	8
16A	25.4	15.88	15.75	7.92	X	24	3	20	13.2

04C

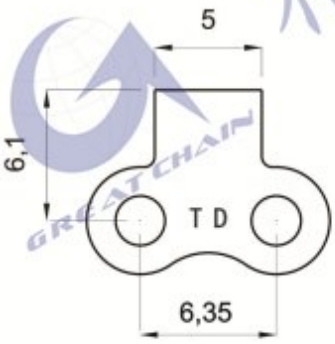

开窗机链
Anti-sidebow chains for pushing window

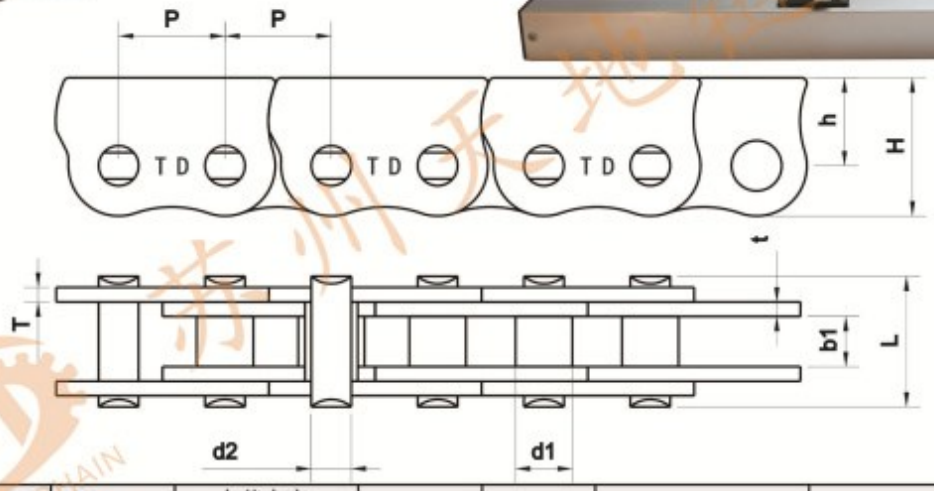

天地链号	节距 Pitch	滚柱直径 Roller diameter	内节内宽 Width between inner plates	销轴直径 Pin diameter	销轴长度 Pin length	内片宽度 Plate depth		链板厚度 Plate thickness	平均抗拉强度 Average tensile strength
Chain No.	P	d1 max	b1	d2 max	L max	H max	h max	t/T max	Q min
	mm	mm	mm	mm	mm	mm	mm	mm	Kn
06C-T1	9.525	5.08	4.77	3.58	11.5	13	8.41	1	4.9
06C-T1.3	9.525	5.08	4.77	3.58	11.9	13	8.41	1.3	5.2
06C-T2	9.525	5.08	4.77	3.58	12.8	13	8.41	2/1.3	6
06B	9.525	6.35	5.72	3.28	13.2	13	8.41	1.3	5.8
08A	12.7	7.95	8.2	3.96	16.6	17	11	1.5	13.8
08B	12.7	8.51	7.75	4.45	18.6	14	9	2	20
20A	31.75	19.05	18.9	9.53	40.4	35	25	4	109.2

08A-F1

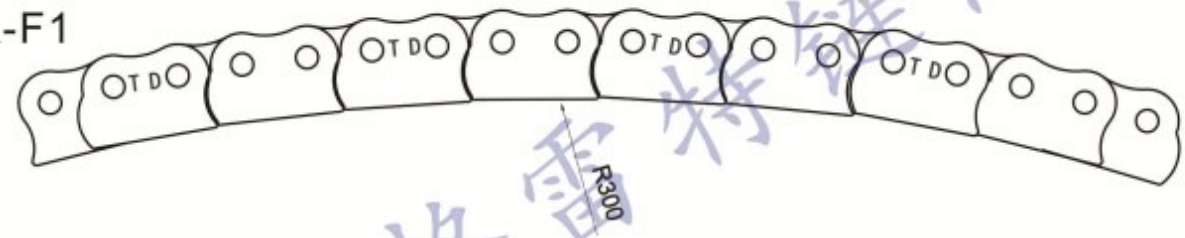

P11.5 Qmin=5.5kN

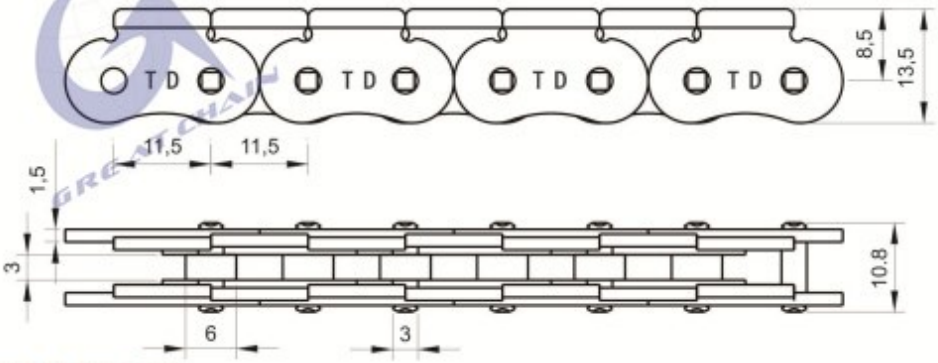

滚轮介绍
Rollers introduction

材质	代码	熔点	使用环境	优点	缺点
聚酰胺-6	PA6	220℃	-30～80℃	弹性好，有较好的消振，降噪能力	疲劳强度钢性，耐热性低于尼龙66
聚己二酰己二胺	PA66	253℃	-30～80℃	疲劳强度和钢性较高，耐热性较好，摩擦系数低，耐磨性好	吸湿性大，尺寸稳定性不够
聚甲醛	POM	175℃	-40～100℃	较好的机械强度、刚性、疲劳强度、环境抵抗性，耐有机溶剂性佳、耐反覆冲击性强、良好的电气性质、复原性良好，具自己润滑性、耐磨性良好、尺寸安定性优。	受强酸腐蚀，耐侯差，粘合性差，热分解与软化温度接近，限氧指数小。
聚四氟乙烯（铁氟龙）	PTFE	327℃	-190～250℃	耐高温、耐低温、具有良好的机械韧性、耐腐蚀、摩擦系数最低、不粘附、	受载时容易出现蠕变现象
其他材质：10#钢（冷镦）、45#（车加工）、不锈钢SS201、不锈钢SS304					

加工工艺	
冷镦 具有较高的生产率，大大减少材料消耗，降低生产成本	车床加工 加工质量稳定、精度高、尺寸随意定制
表面处理	
滚亮抛光	无心磨床　磨外圆
镀镍	镀锌

侧滚轮链条(06B、06C)
Conveyor chains with outboard rollers(06B、06C)

A Type

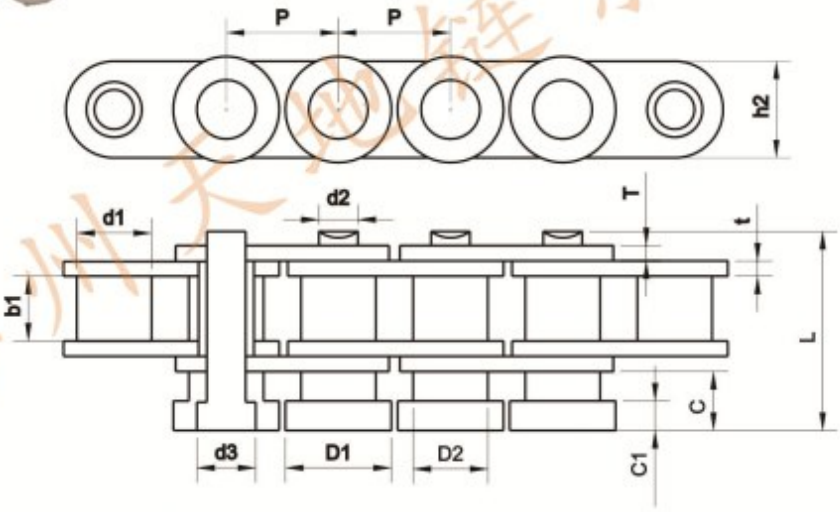

B Type

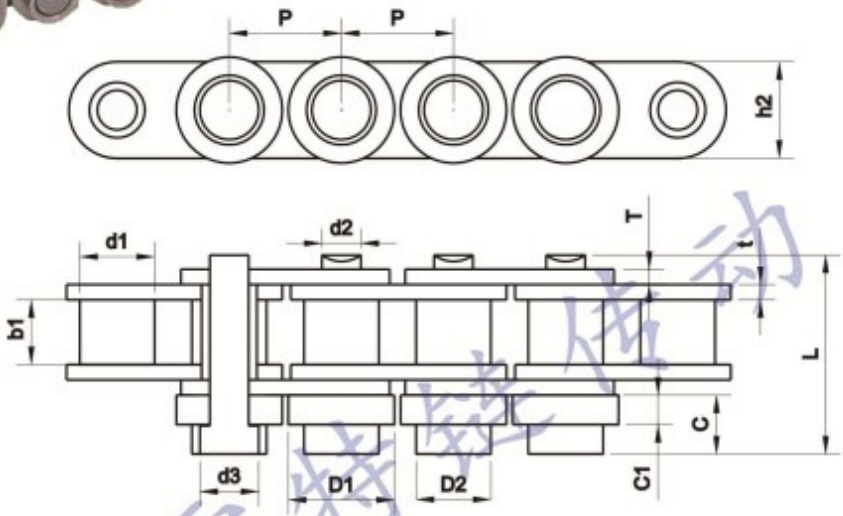

天地链号	节距 Pitch	滚柱直径 Roller diameter	内节内宽 Width between inner plates	销轴直径 Pin diameter	内片宽度 Inner plate depth	链板厚度 Plate thickness	销轴长度 Pin length		滚轮尺寸 Roller dimension			
Chain No.	P	d1 max	b1 min	d2 max	h2 max	t/T max	L max	Lc max	D1	D2	C1	C
	mm	mm	mm	mm	mm	mm	mm	mm	mm	mm	mm	mm
06C-SR	9.525	5.08	4.77	3.58	9	1.3	16.1	17.1	9	6.35	2.5	5
06B-SR	9.525	6.35	5.72	3.28	8.2	1.3	17.1	18.1	9	6.35	2.5	5
06BF1-SR	9.525	6.35	5.72	3.28	8.2	1.3	18.6	19.6	9	6.35	2.5	6.5
06B-2 SR	9.525	6.35	5.72	3.28	8.2	13	27.2	28.2	9	6.35	2.5	5

滚轮材质：尼龙、碳钢、不锈钢　　C1、C尺寸可以定做
Roller material:plastic、45#、SS201、SS304　The size of C1、C can be customized

天地链条
TD CHAIN

侧滚轮链
Conveyor chains with outboard rollers

千鸟型 PSR
Plover type

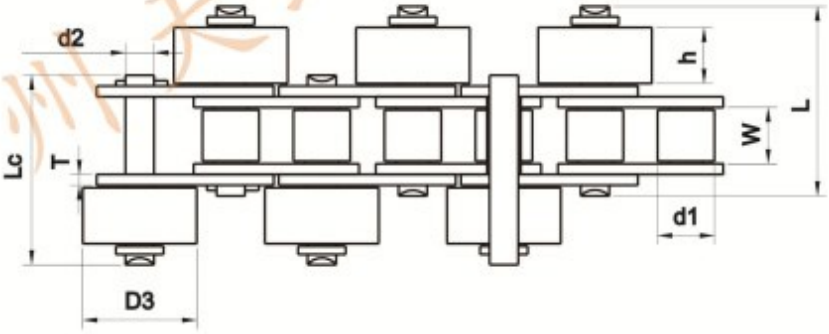

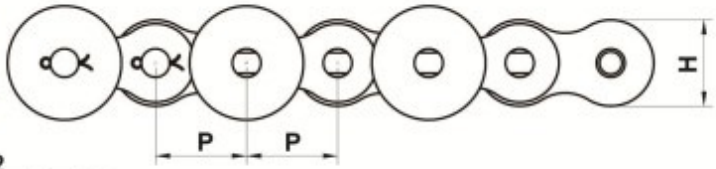

平行型 SSR
Parallel type

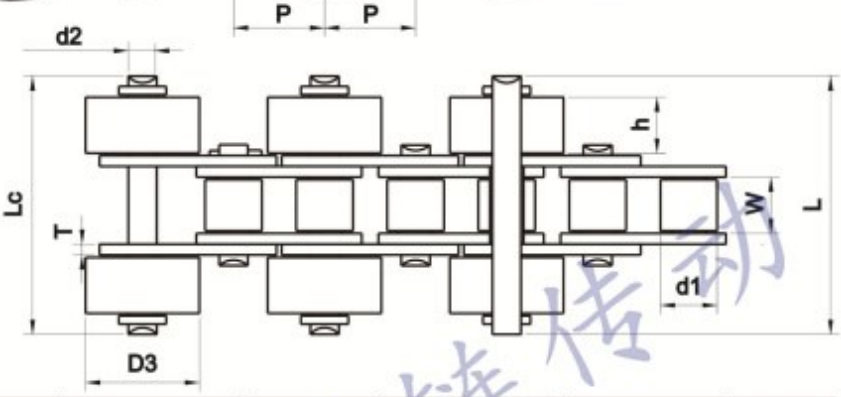

型号	天地链号	节距 Pitch	内节内宽 Width between inner plates	销轴直径 Pin diameter	滚子外径 Roller diameter		滚轮高度 Roller thickness	销轴长度 Pin length		链板尺寸 Plate dimension		每米重量 Weight per
Chain No.	Chain No.	P	W	d2 max	d1 max	D3	h	L	LC	H max	T	max
		mm	mm	mm	mm	mm	mm	mm	mm	mm	mm	kg/m
40-PSR	08A	12.7	7.85	3.96	7.96	15.88	7.6	25.8	27	12	1.5	1.85
40-SSR								34.4	36			
08B-PSR		12.7	7.75	4.45	8.51	15.88	7.6	25.8	27	11.8	1.5	1.85
08B-SSR								34.3	36			
50-PSR	10A	15.875	9.4	5.08	10.16	19.05	9.2	31.3	33	15.09	2	2.64
50-SSR								41.8	43.5			
60-PSR	12A	19.05	12.57	5.96	11.91	22.23	12.4	39	41	18.08	2.4	3.85
60-SSR								52	55			
80-PSR	16A	25.4	15.88	7.92	15.88	28.58	15.5	49.6	52	24.13	3.2	6.16
80-SSR								66.7	70			
100-PSR	20A	31.75	18.9	9.54	19.05	39.69	19	61.7	65	30.18	4	10.22
100-SSR								83	87			

滚轮材质：尼龙、碳钢、不锈钢
Roller material:plastic、45#、SS201、SS304

侧滚轮链(双节距)
Conveyor chains with outboard rollers(double pitch)

千鸟型 **PSR**
Plover type

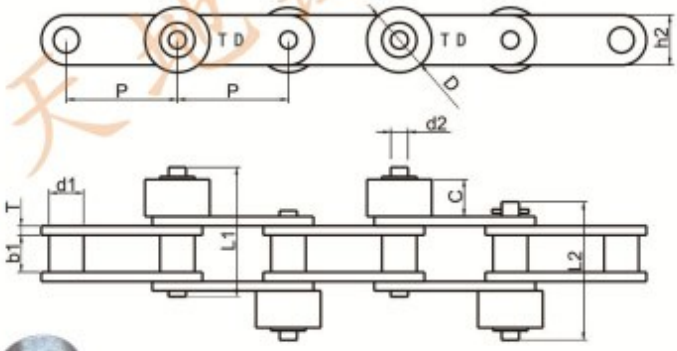

平行型 **SSR**
Parallel type

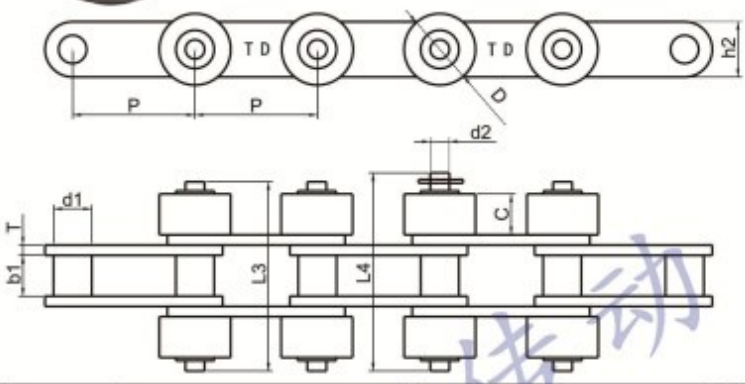

型号	天地链号	节距 Pitch	内节内宽 Width between inner plates	滚子外径 Roller diameter	销轴直径 Pin diameter	销轴长度 Pin length				滚轮尺寸 Roller dimension		链板尺寸 Plate dimension		每米重量 Weight per
Chain No.	Chain No.	P	b1	d1	d2 max	L1	L2	L3	L4	D	C	h2	T	max
		mm	mm	mm	mm	mm	mm	mm	mm	mm	mm	mm	mm	kg/m
C208A	C2040	25.4	7.85	7.95	3.96	25.8	27	34.4	36	15.88	7.6	12	1.5	1.08
C208AL	C2042			15.88						24				2.31
C208B		25.4	7.75	8.51	4.45	25.8	27	34.4	36	15.88	7.6	11.8	1.6	1.13
C208BL				15.88						24				2.36
C210A	C2050	31.75	9.4	10.16	5.08	31.3	33	41.8	43.5	19.05	9.2	15	2.03	1.55
C210AL	C2052			19.05						27				3.11
C212A	C2060	38.1	12.57	11.91	5.94	39	41	52	55	22.23	12.4	18	2.4	2.65
C212AL	C2062			22.23						30				4.2
C212AH	C2060H	38.1	12.57	11.91	5.94	42.2	44.2	55.2	58.2	22.23	12.4	18	3.2	2.97
C212AHL	C2062H			22.23						30				4.52
C216A	C2080	50.8	15.75	15.88	7.92	49.6	52	66.7	70	28.58	15.5	24	3.2	4.38
C216AL	C2082			28.58						38				6.88
C216AH	C2080H	50.8	15.75	15.88	7.92	52.8	55.2	70.2	73	28.58	15.5	24	4	4.84
C216AHL	C2082H			28.58						38				7.34
C220A	C2100	63.5	18.9	19.05	9.53	61.7	65	83	87	39.68	18.9	30	4	7.08
C220AL	C2102			39.68						50				11.49
C220AH	C2100H	63.5	18.9	19.05	9.53	65.3	68.6	86.2	90.2	39.68	18.9	30	4.8	7.63
C220AHL	C2102H			39.68						50				12.04

滚轮材质：尼龙、碳钢、不锈钢
Roller material:plastic、45#、SS201、SS304

天地链条
TD CHAIN

单侧长销滚轮链
Conveyor chains with outboard rollers and extended pins

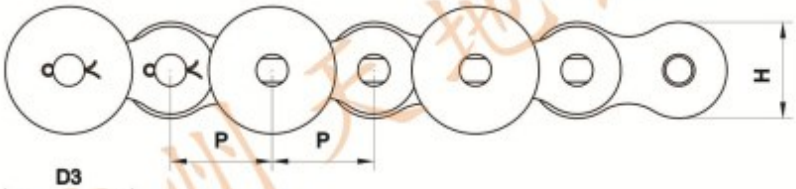

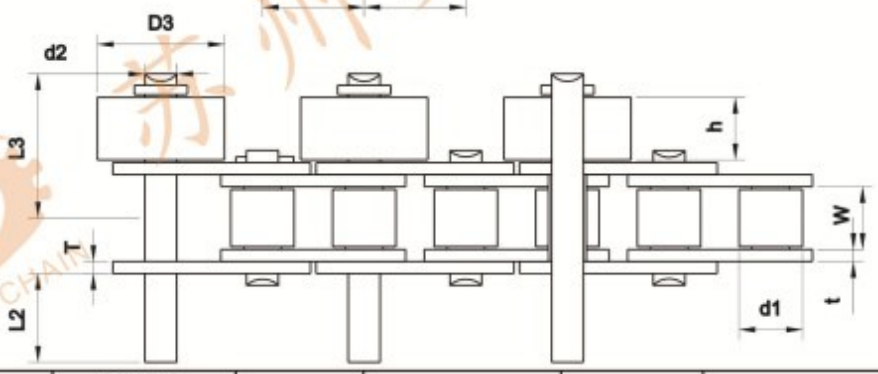

型号	天地链号	节距 Pitch	内节内宽 Width between inner plates	销轴直径 Pin diameter	滚子外径 Roller diameter		滚轮高度 Roller thickness	销轴长度 Pin length		链板尺寸 Plate dimension	
Chain No.	Chain No.	P	W	d2 max	d1 max	D3	h	L2 max	L3 max	H max	T
		mm	mm	mm	mm	mm	mm	mm	mm	mm	mm
40	08A	12.7	7.85	3.98	7.92	15.88	7.8	X	19.5	12.07	1.5
	08B	12.7	7.75	4.45	8.51	15.88	7.8	X	19.5	11.8	1.5
50	10A	15.875	9.4	5.08	10.16	19.05	9.4	X	23.5	15.09	2
60	12A	19.05	12.57	5.96	11.91	22.23	12.6	X	30.6	18.08	2.4
80	16A	25.4	15.88	7.92	15.88	28.58	15.8	X	38.2	24.13	3.2
100	20A	31.75	18.9	9.54	19.05	39.69	19	X	45.9	30.18	4
C208A	C2040	25.4	7.85	3.96	7.95	15.88	7.6	X	19.5	12	1.5
C208AL	C2042				15.88	24					
C208B		25.4	7.75	4.45	8.51	15.88	7.6	X	19.5	11.8	1.6
C208BL					15.88	24					
C210A	C2050	31.75	9.4	5.08	10.16	19.05	9.4	X	23.5	15	2.03
C210AL	C2052				19.05	27					
C212A	C2060	38.1	12.57	5.94	11.91	22.23	12.6	X	30.6	18	2.4
C212AL	C2062				22.23	30					
C212AH	C2060H	38.1	12.57	5.94	11.91	22.23	12.6	X	32.2	18	3.2
C212AHL	C2062H				22.23	30					
C216A	C2080	50.8	15.75	7.92	15.88	28.58	15.7	X	38.2	24	3.2
C216AL	C2082				28.58	38					
C216AH	C2080H	50.8	15.75	7.92	15.88	28.58	15.7	X	39.8	24	4
C216AHL	C2082H				28.58	38					
C220A	C2100	63.5	18.9	9.53	19.05	39.68	18.9	X	45.9	30	4
C220AL	C2102				39.68	50					
C220AH	C2100H	63.5	18.9	9.53	19.05	39.68	18.9	X	47.5	30	4.8
C220AHL	C2102H				39.68	50					

滚轮材质：尼龙、碳钢、不锈钢
Roller material:plastic、45#、SS201、SS304

X 可以任意值　　X can be any calue

特殊滚轮链
Conveyor chains with special rollers

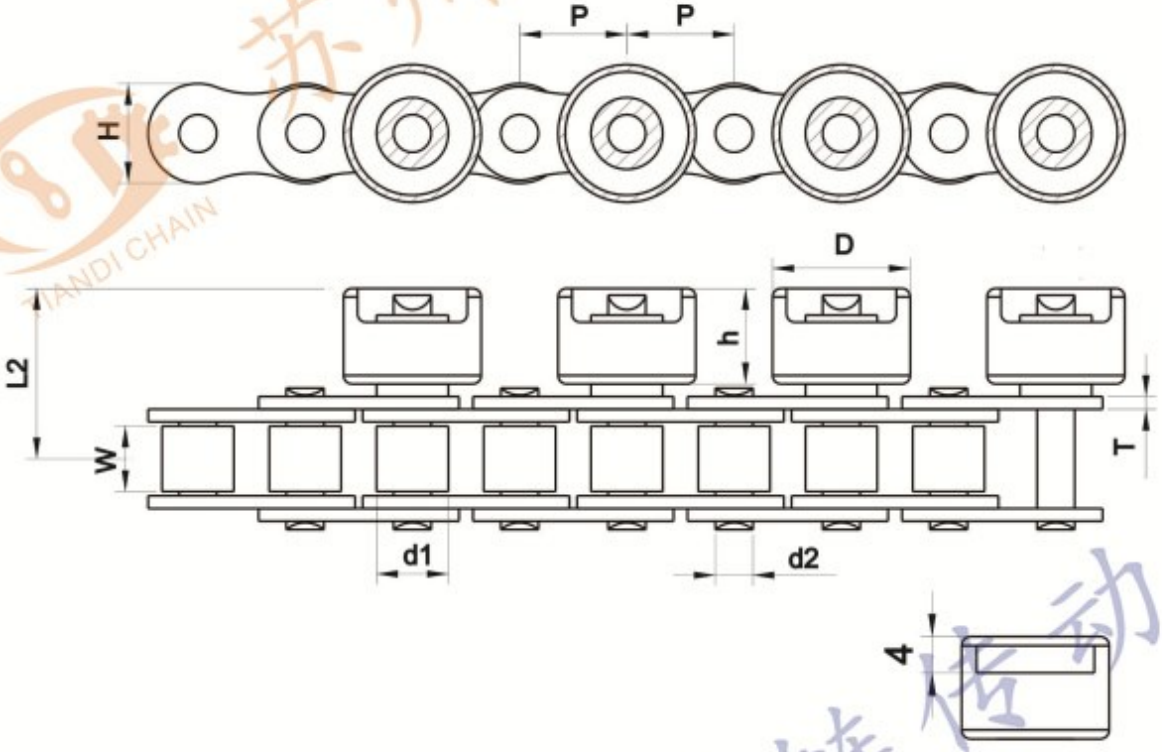

型号	天地链号	节距 Pitch	内节内宽 Width between inner plates	销轴直径 Pin diameter	滚子外径 Roller diameter		滚轮高度 Roller thickness	销轴长度 Pin length	链板尺寸 Plate dimension		每米重量 Weight per
Chain No.	Chain No.	P	W	d2 max	d1 max	D3	h	L2 max	H max	T	max
		mm	mm	mm	mm	mm	mm	mm	mm	mm	kg/m
40	08A	12.7	7.85	3.98	7.92	15.88	11.3	18.5	12.07	1.5	1.85
	08B	12.7	7.75	4.45	8.51	15.88	11.3	18.5	11.8	1.5	1.85
50	10A	15.875	9.4	5.08	10.16	19.05	13	22	15.09	2	2.64
60	12A	19.05	12.57	5.96	11.91	22.23	16.2	27.5	18.08	2.4	3.85
80	16A	25.4	15.88	7.92	15.88	28.58	19.5	34	24.13	3.2	6.16
100	20A	31.75	18.9	9.54	19.05	39.69	23	41	30.18	4	10.22

顶滚轮链
Conveyor chains with top rollers

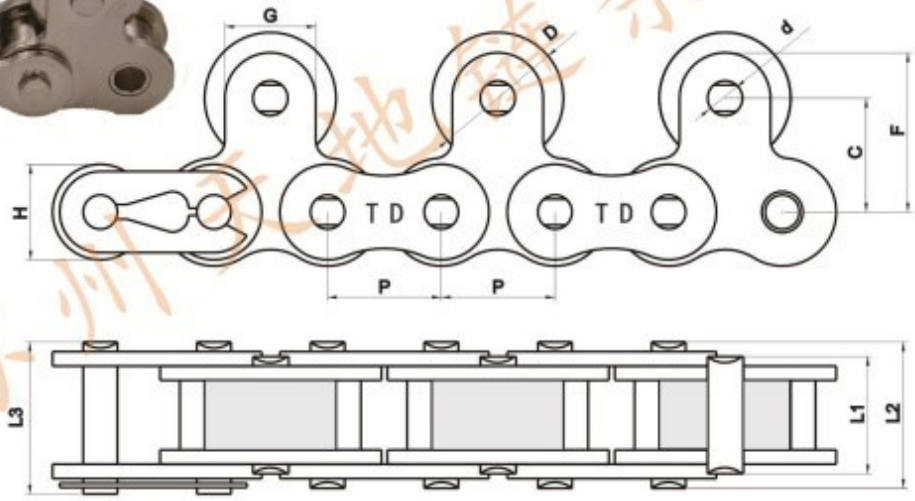

A Type

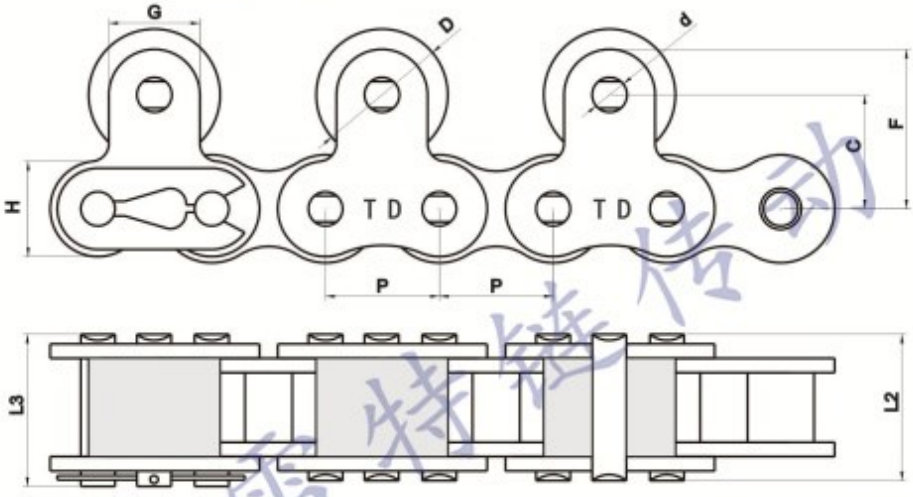

B Type

型号	天地链号	节距 Pitch	滚轮直径 Roller diameter		销轴直径 Pin diameter	附板尺寸 Attachment dimension				销轴长度 Pin length			极限抗拉强度 Ultimate tensile strength	每米重量 Weight per meter
Chain No.	Chain No.	P	A type D	B type D	d max	G	C	F	H	L1 max	L2 max	L3 max	Q min	q
		mm	mm	mm	mm	mm	mm	mm	mm	mm	mm	mm	kN/Ibf	kg/m
40-TR	08A-TR	12.7	15.88	11	3.96	9.5	12.7	17.45	12	13.5	16.6	17.8	14.4/3250	1.3
	08AF1-TR	12.7	15.88	11	3.96	9.5	15.7	20.45	12	13.5	16.6	17.8	14.4/3250	1.33
	08B-TR	12.7	15.88	11	4.45	7.5	11.3	15.05	10.3	-	16.7	18.2	18/4091	1.28
50-TR	10A-TR	15.875	19.05	15	5.08	12.7	15.9	22.25	15	16.5	20.7	22.2	22.2/5405	1.9
60-TR	12A-TR	19.05	22.23	18	5.94	15.9	18.3	26.25	18.1	21	25.9	27.7	31.8/7227	2.9
80-TR	16A-TR	25.4	28.58	24	7.92	19.1	24.6	34.15	24.1	26.2	32.7	35	56.7/12886	4.8
	16AF2-TR	25.4	-	24	7.92	19.1	32.5	42	24.1	26.2	32.7	35	56.7/12886	5.2
100-TR	20A-TR	31.75	36.69	30	9.53	25.4	31.8	44.5	30.1	32.3	40.4	44.7	88.5/20114	7.9

滚轮材质：尼龙、碳钢、不锈钢
Roller material:plastic、45#、SS201、SS304

顶滚轮链
Conveyor chains with top rollers

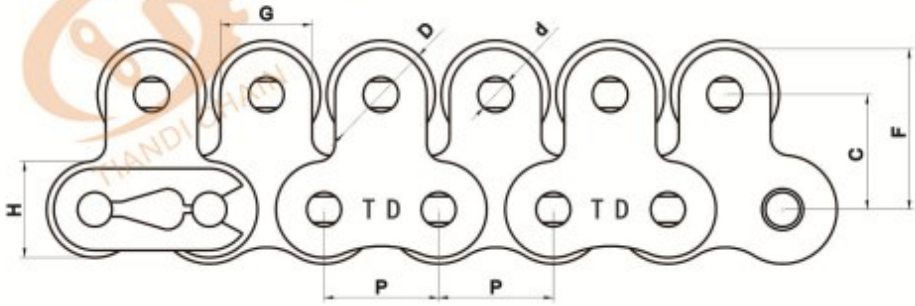

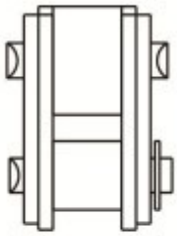

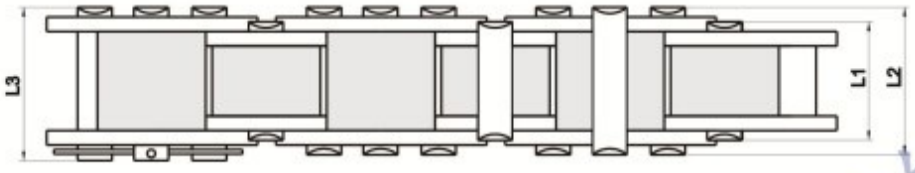

型号	天地链号	节距 Pitch	滚轮直径 Roller diameter	销轴直径 Pin diameter	附板尺寸 Attachment dimension				销轴长度 Pin length			极限抗拉强度 Ultimate tensile strength	每米重量 Weight per meter
Chain No.	Chain No.	P	D	d max	G	C	F	H	L1 max	L2 max	L3 max	Q min	q
		mm	mm	mm	mm	mm	mm	mm	mm	mm	mm	kN/lbf	kg/m
40-TR	08A-TR	12.7	11	3.96	9.5	12.7	17.45	12	13.5	16.6	17.8	14.4/3250	1.44
	08AF1-TR	12.7	11	3.96	9.5	15.7	20.45	12	13.5	16.6	17.8	14.4/3250	1.47
	08B	12.7	11	4.45	9.5	12.7	17.45	12	13.5	16.7	17.8	18/4091	1.5
50-TR	10A-TR	15.875	15	5.08	12.7	15.9	22.25	15	16.5	20.7	22.2	22.2/5405	2.3
60-TR	12A-TR	19.05	18	5.94	15.9	18.3	26.25	18.1	21	25.9	27.7	31.8/7227	3.4
80-TR	16A-TR	25.4	24	7.92	19.1	24.6	34.15	24.1	26.2	32.7	35	56.7/12886	5.9
100-TR	20A-TR	31.75	30	9.53	25.4	31.8	31.1	30.1	32.3	40.4	44.7	88.5/20114	8.9

顶滚轮链
Conveyor chains with top rollers

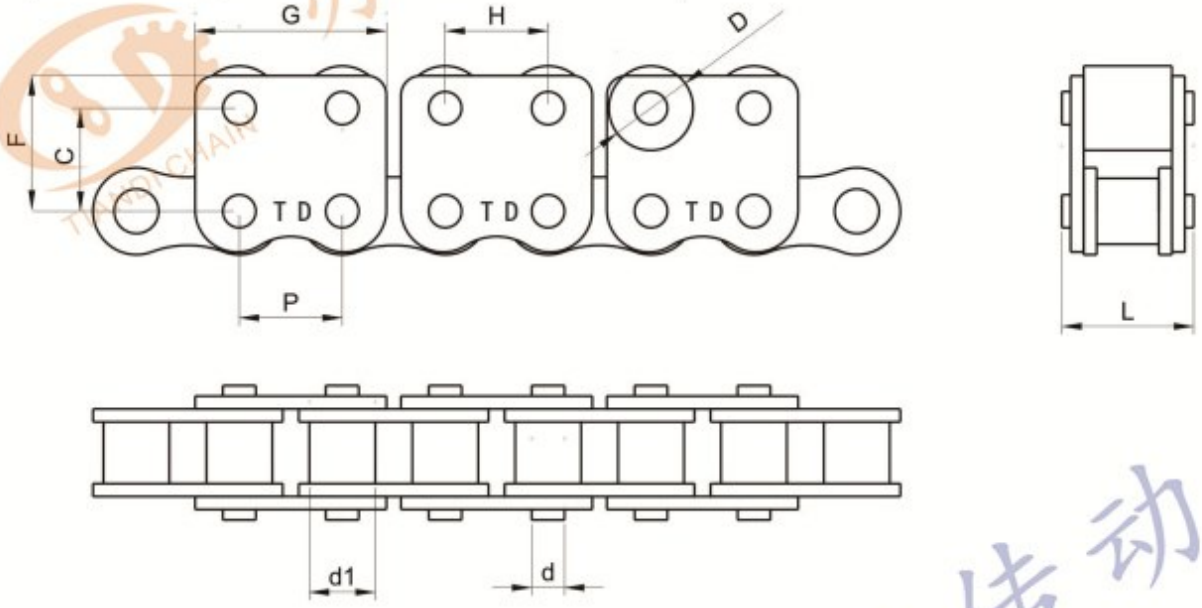

天地链号	节距 Pitch	滚轮直径 Roller diameter		销轴直径 Pin diameter	销轴长度 Pin length	附板尺寸 Attachment dimension			
Chain No.	P	d1	D	d max	L	G	C	F	H
	mm	mm	mm	mm	mm	mm	mm	mm	mm
06B-WTR	9.525	6.35	10	3.28	13.2	17.8	10	13.5	-
06B-F1-WTR	9.525	6.35	9	3.28	13.2	17.6	9.5	13	9.525
08B-WTR	12.7	8.51	12	4.45	16.6	23	13.7	18.9	12.7
10A-WTR	15.875	10.16	13	5.08	20.7	28.8	15.9	23	15.88
16A-WTR	25.4	15.88	24	7.94	32.7	45.4	25	35	25.4
*16B-WTR	25.4	15.88	15	5.08	36.1	45.4	19.9	25.9	16.5

顶滚轮链(双节距)
Conveyor chains with top rollers(double pitch)

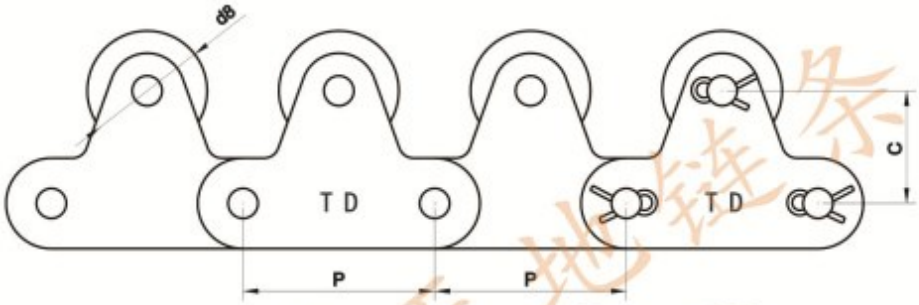

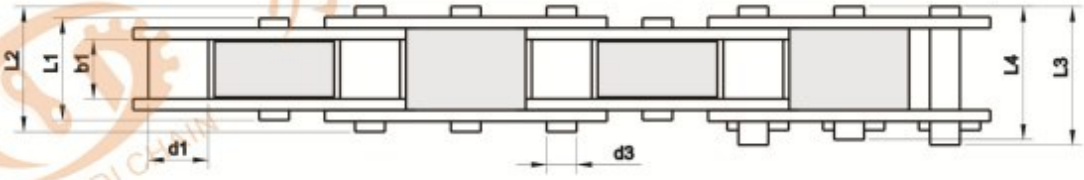

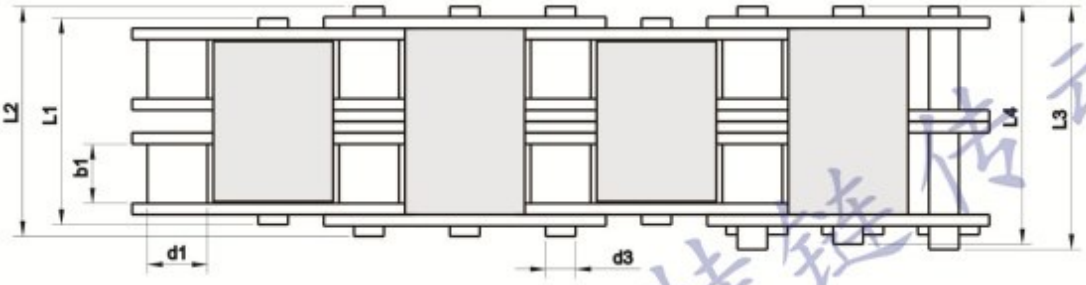

天地链号	节距 Pitch	滚柱直径 Roller diameter		内节内宽 Width between inner plates	销轴直径 Pin diameter	销轴长度 Pin length				附板尺寸 Attachment dimension	极限抗拉强度 Ultimate tensile strength	每米重量 Weight per meter
Chain No.	P	d1 max	d8 max	b1 min	d3 max	L1 max	L2 max	L3 max	L4 max	C	Q min	q
	mm	mm	mm	mm	mm	mm	mm			mm	kN/Ibf	kg/m
C2040-1LTR	25.4	7.95	15.88	7.85	3.96	13.5	16.6	18.8	17.8	12.7/15	14.1/3205	1.31
C2040-F1	25.4	7.95	15.88	7.85	3.96	13.5	16.6	18.8	17.8	31	14.1/3205	1.6
C2050-1LTR	31.75	10.16	19.05	9.4	5.08	16.5	20.7	23.3	22.2	15.9/19	22.2/5045	2.03
C2060-1LTR	38.1	11.91	22.23	12.57	5.94	21	25.9	28.3	27.7	18.3/24	31.8/7227	2.89
C2080-1LTR	50.8	15.88	28.58	15.75	7.92	26.2	32.7	36.5	35	29/24.6	56.7/12886	4.54
C2100-1LTR	63.5	19.05	39.67	18.9	9.53	32.3	40.4	44.7	44.7	35.4/31.8	88.5/20114	7.72
C208B-2LTR	25.4	8.51	15.88	7.75	4.45	28	31	33	31	12.7/15	14.1/3205	2.62
C2050-2LTR	31.75	10.16	19.05	9.4	5.08	35.1	39.06	40.7	39.1	15.9/19	22.2/5045	4.06
C2060H-2LTR	38.1	11.91	22.23	12.57	5.94	48.5	54.9	56.9	54.9	18.3/24	31.8/7227	5.78
C2080H-2LTR	50.8	15.88	28.58	15.75	7.92	60.2	68.2	71.2	68.2	29/24.6	56.7/12886	9.08
C2100-2LTR	63.5	19.05	38	18.9	9.53	68.4	76.4	80.4	76.4	35.4/31.8	88.5/20114	15.44

倍速链
Double plus chains

A Type

B Type

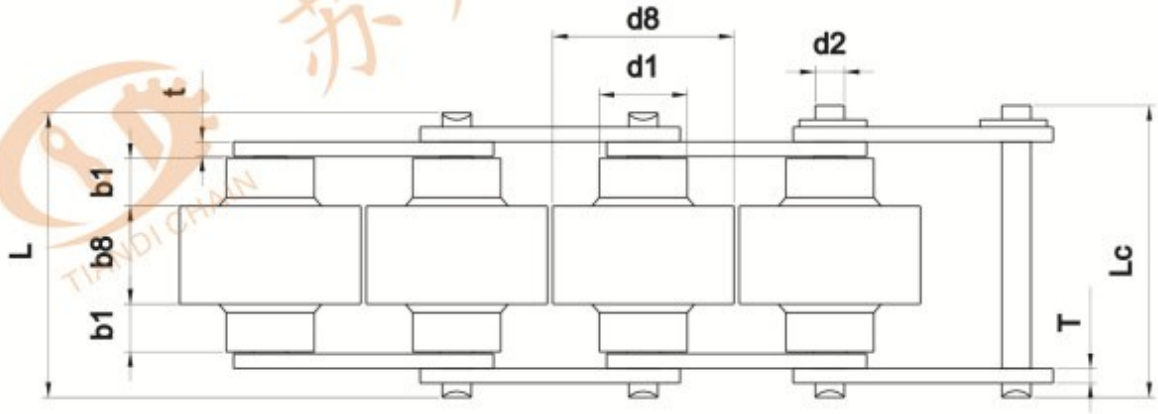

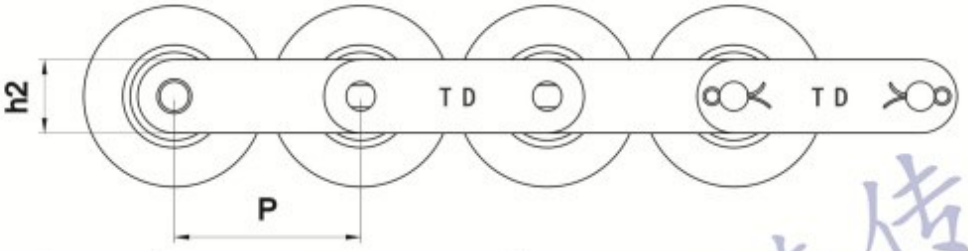

天地链号	链号	节距 Pitch	滚子尺寸 Roller dimension				销轴尺寸 Pin dimension		链板尺寸 Plate dimension				每米重量 Weight per meter
Chain No.	NO.	P	d1 max	d8 max	b1 max	b8 max	d2 max	L max	Lc max	h2 max	T max	t max	q
		mm	mm	mm	mm	mm	mm	mm	mm	mm	mm	mm	kg/m
BS10-C212A		38.1	18	37	9.75	20	5.94	58.1	62.7	15	3	4	2.14
BS10-C212AF1		38.1	22.23	36.6	8.5	15.5	5.94	48.8	51.5	18	3	3	2.19
BS25-C206B	C2030W	19.05	11.91	18.3	4	8	3.28	24	25.6	8.26	1.3	1.5	0.52
BS25-C208A	C2040W	25.4	15.88	24.6	5.7	10.3	3.96	31	32.8	11.7	1.5	1.5	0.79
BS25-C210A	C2050W	31.75	19.05	30.6	7.1	13	5.08	39.5	41.2	15	2.06	2.06	1.36
BS25-C212A	C2060HW	38.1	22.23	36.6	8.5	15.5	5.94	48.8	50.5	18	3.25	3.25	2.19
BS25-C216A	C2080W	50.8	28.58	49	11	21.5	7.92	66.2	70	24	4	5	4.06
BS30-C206B		19.05	9	18.3	4.5	9.1	3.28	26.3	29.6	7.28	1.3	1.5	0.5
BS30-C208A		25.4	11.91	24.6	6.1	12.5	3.96	35.6	39.5	9.6	1.5	2	0.83
BS30-C210A		31.75	14.8	30.6	7.5	15	5.08	43	47.1	12.2	2	2.4	1.27
BS30-C212A		38.1	18	37	9.75	20	5.94	58.1	62.7	15	3	4	2.14
BS30-C216A		50.8	22.23	49	12	25.2	7.92	71.9	77.3	18.6	4	5	3.55

三排倍速链
Double plus chains (triplex)

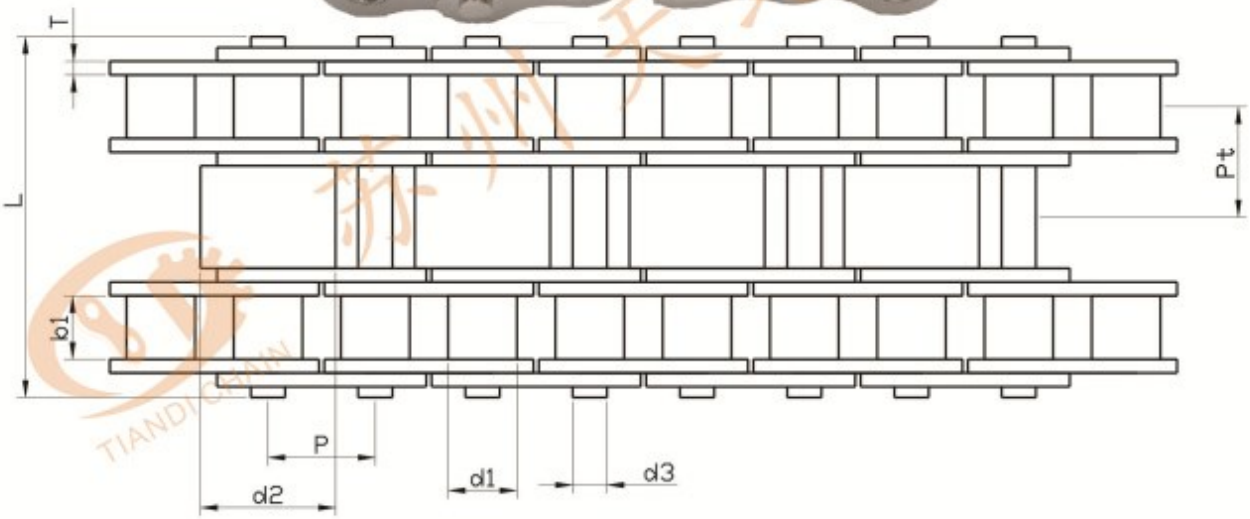

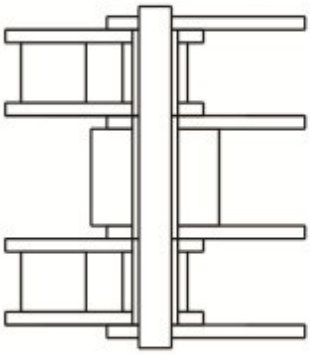

A TYPE

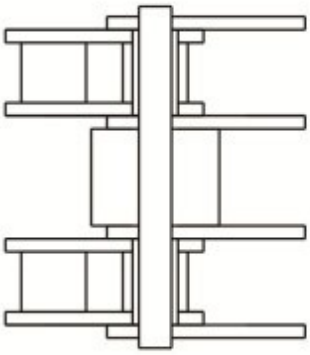

B TYPE

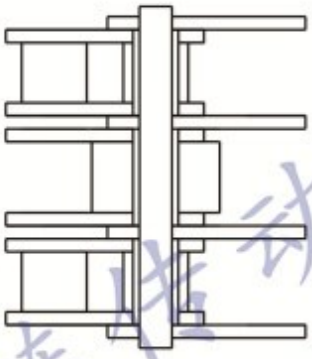

C TYPE

天地链号	节距 Pitch	滚柱直径 Roller diameter		内节内宽 Width between inner plates	销轴尺寸 Pin size		链板厚度 Plate thickness	排距 Transverse pitch	极限抗拉强度 Ultimate tensile strength	平均抗拉强度 Average tensile strength
Chain No.	P	d1 max	d2	b1 min	d3	L	t/T	Pt	Q min	Q0
	mm	mm	mm	mm	mm	mm	mm	mm	kN/Ibf	kN
06BS-3-C14/P14	9.525	6.35	14	5.72	3.28	33.5	1.3	10.24	14/3147	16.1
06BS-3-C15/P15	9.525	6.35	15	5.72	3.28	33.5	1.3	10.24	16.9/3841	18.7
08BS-3-45-C16	12.7	8.51	16	7.75	4.45	45.1	1.5	13.92	32/7273	38.7
08BS-3-45-C17	12.7	8.51	17	7.75	4.45	45.1	1.5	13.92	32/7273	38.7
08BS-3-45-C20	12.7	8.51	20	7.75	4.45	45.1	1.5	13.92	32/7273	38.7
12AS-3-65-C28	19.05	11.91	28	12.57	5.94	65.3	2.4	19.6	62.3/14005	71.6
12BS-3-62-C26	19.05	12.07	26	11.68	5.72	61.5	1.85	19.46	57.8/12993	66.1
12BS-3-62-C28	19.05	12.07	28	11.68	5.72	61.5	1.85	19.46	57.8/12993	66.1
12BS-3-62-C31	19.05	12.07	31	11.68	5.72	61.5	1.85	19.46	57.8/12993	66.1
16BS-3-100-C35	25.4	15.88	35	17.02	8.28	100	4.15/3.1	31.88	160/35968	184
16BS-3-100-C38	25.4	15.88	38	17.02	8.28	100	4.15/3.1	31.88	160/35968	184

P代表塑料滚轮　C代表碳钢滚轮

P means roller made in plastic　C means roller made in steel

双侧滚轮倍速链
Double plus chains with two side rollers

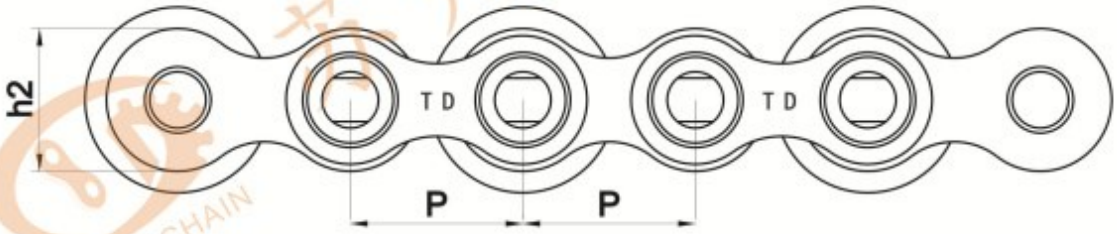

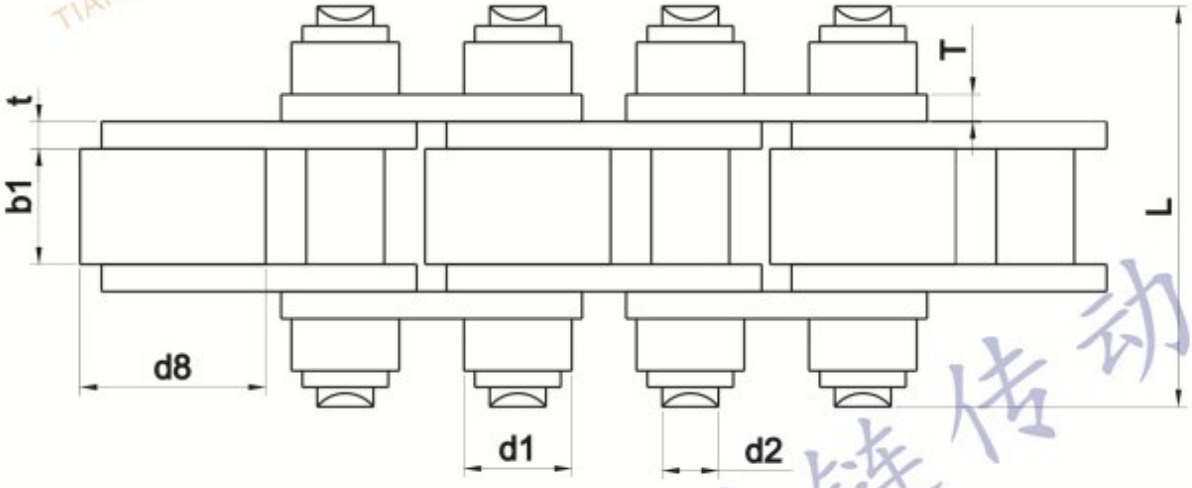

天地链号	节距 Pitch	滚轮直径 Roller diameter		内节内宽 Width between inner plates	销轴直径 Pin diameter	销轴长度 Pin length	链板尺寸 Plate dimension		极限抗拉强度 Ultimate tensile strength	平均抗拉强度 Average tensile strength
Chain No.	P	d1 max	d8 min	b1 min	d2 max	L max	h2 max	t/T max	Q min	Q0
	mm	mm	mm	mm	mm	mm	mm	mm	kN/lbf	kN
08BS-27-P16/C16	12.7	8.51	16	7.75	4.45	27	11.8	1.6/1.5	18.0/4091	19.8
08BS-31-P16/C16	12.7	8.51	16	7.75	4.45	31	11.8	1.6/1.5	18.0/4091	19.8
12BS	19.05	12.07	28	11.68	5.72	45	16	1.85	28.9/6568	31.7
12BS-40-P28/C28	19.05	12.07	28	11.68	5.72	40	16	1.85	29.0/6591	31.7
12BS-43-P26/C26	19.05	12.07	26	11.68	5.72	43	16	1.85	29.0/6592	31.7
12BS-43-P28/C28	19.05	12.07	28	11.68	5.72	43	16	1.85	29.0/6593	31.7
12BS-48-P24/C24	19.05	12.07	24	11.68	5.72	48	16	1.85	29.0/6594	31.7
12BS-48-P26/C26	19.05	12.07	26	11.68	5.72	48	16	1.85	29.0/6595	31.7
12BS-48-P28/C28	19.05	12.07	28	11.68	5.72	48	16	1.85	29.0/6596	31.7
16BS-65-P38/C38	25.4	15.88	38	17.02	8.28	65	21	4.15/3.1	60.0/13636	72.8
212BS-43-P24	38.1	12.07	24	11.68	5.72	43	16	1.85	28.9/6568	31.7

P代表塑料滚轮　C代表碳钢滚轮

P means roller made in plastic　C means roller made in steel

双侧滚轮倍速链
Double plus chains with two side rollers

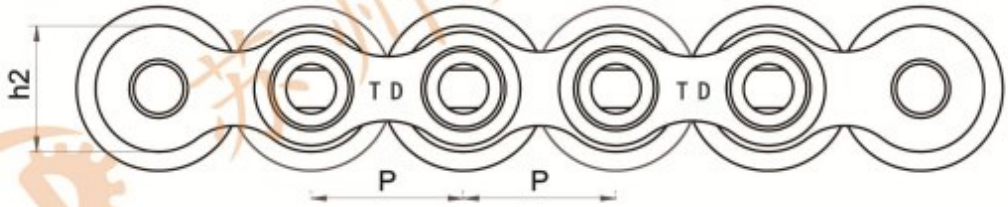

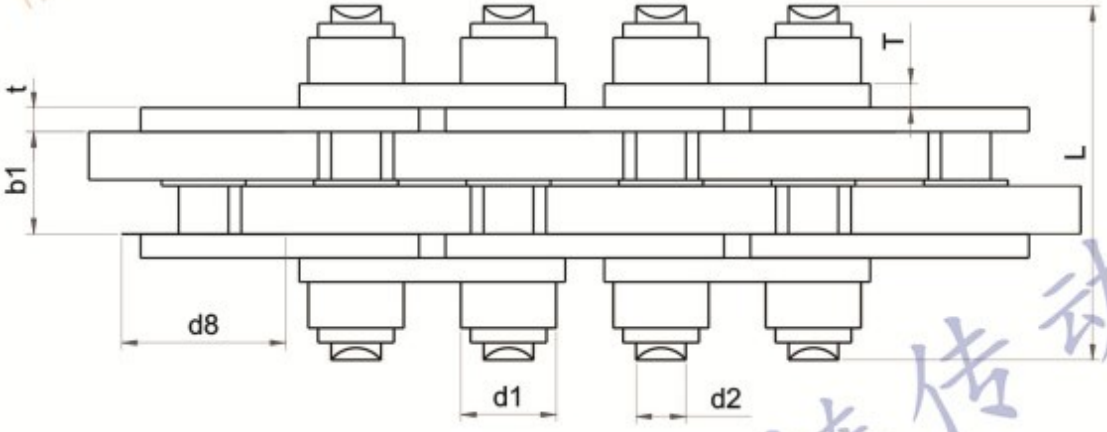

天地链号	节距 Pitch	滚轮直径 Roller diameter		内节内宽 Width between inner plates	销轴直径 Pin diameter	销轴长度 Pin length	链板尺寸 Plate dimension		极限抗拉强度 Ultimate tensile strength	平均抗拉强度 Average tensile strength
Chain No.	P	d1 max	d8 min	b1 min	d2 max	L max	h2 max	t/T max	Q min	Q0
	mm	mm	mm	mm	mm	mm	mm	mm	kN/Ibf	kN
08BS-27-P16/C16	12.7	8.51	16	7.75	4.45	27	11.8	1.6/1.5	18.0/4091	19.8
08BS-31-P16/C16	12.7	8.51	16	7.75	4.45	31	11.8	1.6/1.5	18.0/4091	19.8
12BS	19.05	12.07	28	11.68	5.72	45	16	1.85	28.9/6568	31.7
12BS-40-P28/C28	19.05	12.07	28	11.68	5.72	40	16	1.85	29.0/6591	31.7
12BS-43-P26/C26	19.05	12.07	26	11.68	5.72	43	16	1.85	29.0/6592	31.7
12BS-43-P28/C28	19.05	12.07	28	11.68	5.72	43	16	1.85	29.0/6593	31.7
12BS-48-P24/C24	19.05	12.07	24	11.68	5.72	48	16	1.85	29.0/6594	31.7
12BS-48-P26/C26	19.05	12.07	26	11.68	5.72	48	16	1.85	29.0/6595	31.7
12BS-48-P28/C28	19.05	12.07	28	11.68	5.72	48	16	1.85	29.0/6596	31.7
16BS-65-P38/C38	25.4	15.88	38	17.02	8.28	65	21	4.15/3.1	60.0/13636	72.8
212BS-43-P24	38.1	12.07	24	11.68	5.72	43	16	1.85	28.9/6568	31.7

P代表塑料滚轮　C代表碳钢滚轮

P means roller made in plastic　C means roller made in steel

三排倍速链
Double plus chains (triplex)

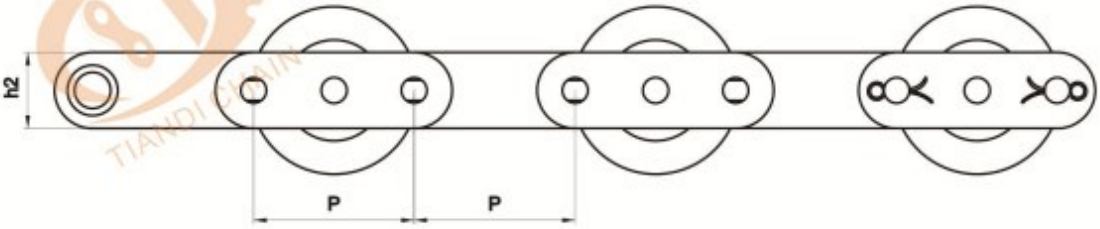

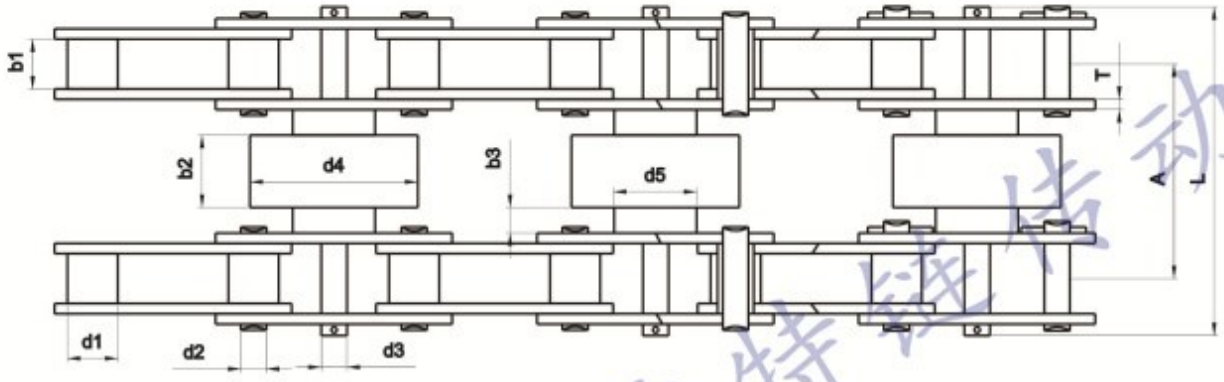

天地链号	节距 Pitch	内节内宽 Width between inner plates	滚柱直径 Roller diameter			滚珠高度 Roller height		销轴尺寸 Pin size			链板尺寸 Plate size		排距 Transverse pitch	极限抗拉强度 Ultimate tensile strength
Chain No.	P	b1 min	d1	d4	d5	b2	b3	d2	d3	L	h	t/T	Pt	Q min
	mm	mm	mm	mm	mm	mm	mm	mm	mm	mm	mm	mm	mm	kN/Ibf
C208A-BS25	25.4	7.85	7.95	30.6	19.05	13	7.1	3.96	5.08	65.5	12.07	1.5	42	14.1/3205
C210A-BS25	31.75	9.4	10.16	36.6	22.23	15.5	8.5	5.08	5.94	76.7	15.09	2	51	22.4/5091

边滚轮链
Conveyor chains with side rollers

A Type

B Type

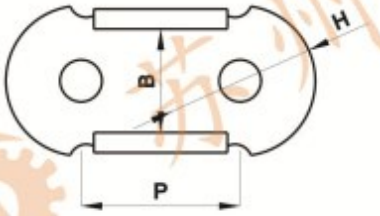

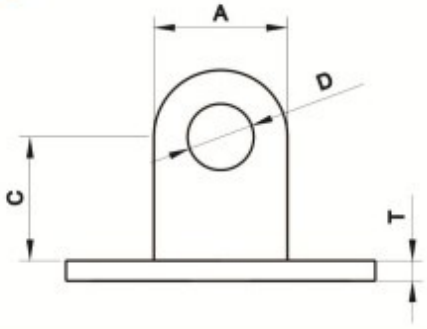

天地链号	节距 Pitch	附板尺寸 Attachment size					
Chain No.	P	A	B	C	D	H	T
	mm	mm	mm	mm	mm	mm	mm
08B	12.7	11.8	10	10	4.45	10.3	1.5
12AF1	19.05	16	12.4	14.8	7.92	18	2.42
12AF2	19.05	12	9	10	3.28	13.5	2.42
16AF1	25.4	13.8	20.6	12.1	5.94	20	3
16AF2	25.4	15	21.4	18	5.94	20	3
16AF3	25.4	16	22.5	14	5.94	21.2	3
16AF4	25.4	16	20	10	7.92	21.2	3
C2040	25.4	11	10	10	3.96	11.8	1.5
C2040-F1	25.4	11	8.1	12	3.96	11.8	1.5
*C2050	31.75	12	8	7.8	5.08	15	2
C2060	38.1	18	15.4	17.6	10	18	2.42
C212B	38.1	50.8	13.8	6.6	5.72	16	1.85
C2080	50.8	18.2	18	12.9	7.92	23.2	3.25
*C2080-F1	50.8	16	12.2	17	8.1	24	3

10A

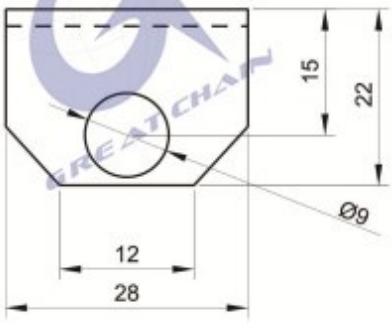

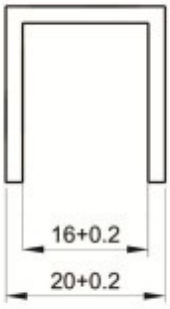

U型盖板、橡胶介绍
U type attchments、rubber introduction

盖板形状
U type attchments Shape

普遍型
Universal type

平的
Flat

C型
C type

缺口、平的
Gap、Flat

D型
D type

缺口、下凹
Gap、Concave

橡 胶 性 能 汇 总 表

	橡胶名称	丁腈	硅	聚氨酯	氟	天然	异戊	顺丁	丁苯	丁基	乙丙	乙烯-醋酸乙烯共聚	氯丁	氯磺化聚乙烯	氯化聚乙烯	氯醇	腈戊	聚丙烯酸酯	聚硫
	常见缩写	NBR	SI	PU	FPM	NR	IR	BR	SBR	IIR	EPDM	EVA	CR	CSM	CPE	CHR	NIR	ACM	T
硫化胶机械性能	硬度（邵氏A）	15~100	30~90	10~100	50~90	10~100	20~100	30~100	30~100	20~90	30~90	50~90	10~90	50~90	50~85	20~90	15~100	40~90	30~90
	扯断强度，kg/cm²	50~250	40~100	200~450	70~200	30~300	50~200	20~200	50~200	50~150	50~200	70~200	50~250	70~200	70~200	–	100~300	70~120	30~150
	伸长率，%	100~800	50~500	300~800	100~500	100~1000	100~1000	100~800	100~800	100~800	100~800	100~600	100~1000	100~500	100~600	–	100~900	100~600	100~700
	弹性	B	A	A	C	A	A	A	B	C	B	B	A	B	B	B	B	C	C
	抗撕裂强度	B	C~D	A	B	A	B	B	C	B	C	B	B	B	B	B	B	C	C~D
	压缩永久变形	A	A	A	B	A	A	B	B	C	B	B	A	B	B	B	B	D	D
	耐磨性	A	C~D	A	A	A	A	A	A	B	B	B	A~B	A	A	B	A	B	C~D
	耐曲挠龟裂性	B	B~D	A	B	A	A	C	B	A	B	B	B	B	B	–	B	B	D
硫化胶物理性能	耐热性（最高使用温度）	120	250	80	250	100	100	100	100	150	150	100	120	150	150	150	120	160	80
	耐寒性（脆性温度）	-20	-120	-60	-20	-70	-5-70	-70	-60	-55	-60	-30	-55	-60	–	-40	-10	-30	-40
	耐老化性	B	A	B	A	B	B	B	B	A	A	A	A	A	A	A	A	A	B
	耐臭氧性	D	A	A	A	D	D	D	D	A	A	A	B	B	A	A	D	A	A
	耐光、耐候性	B	A	A	A	B	B	B	B	A	A	A	A	A	A	A	B	A	A
	耐燃性	C~D	B~D	C~D	A	D	D	D	D	D	D	D	B	B	B	B	C~D	C~D	D
	不透气性	B	D	B	A	B	B	B	C	A	A	A	B	A	B	A	B	B	A
	耐辐射性	B~D	A~C	B	B~C	B~C	B~C	D	B	D	B	B	B~C	B~C	–	–	B~D	B~D	B~C
硫化胶耐介质性能	汽油	A	C~D	A	A	D	D	D	D	D	D	D	B	B	B	A	A	A	A
	苯、甲苯	C~D	C~D	C~D	A	D	D	D	D	C	C	D	D	C~D	C~D	C~D	C~D	D	B
	三氯乙烯	D	B~D	D	B	D	D	D	D	D	D	D	D	D	D	D	D	D	B~C
	酒精	A	A	C	A	A	A	A	A	A	A	C	A	A	A	A	A	D	A
	甲乙酮，醋酸乙烯	D	B	D	D	B~C	B~C	B~C	B~C	A	A	D	B~C	C	C	D	D	D	A
	强酸	B	C	D	A	C	C	C	C	A	B	B	B	A	A	B	B	C	D
	弱酸	B	B	C	A	B	B	B	B	A	A	B	A	A	A	B	B	B	C
	强碱	B	A	D	D	B	B	B	B	A	A	A	A	A	A	B	B	C	C
	弱碱	B	A	D	C	B	B	B	B	A	A	A	A	A	A	B	B	B	C

平板链
Roller chain with flat attachments

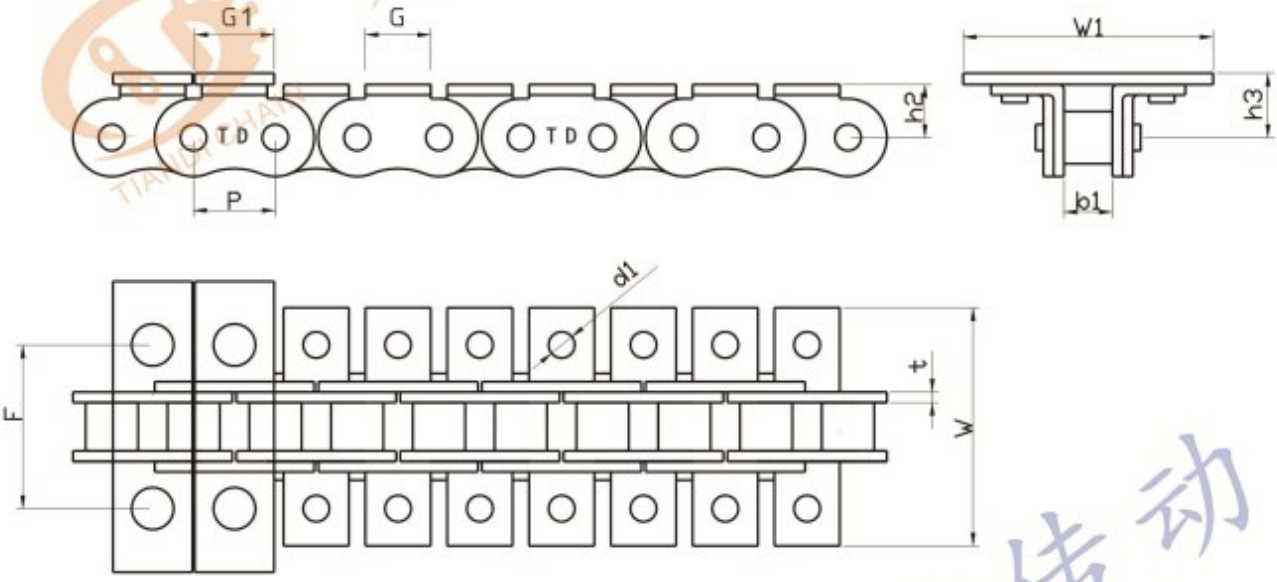

天地型号	节距 Pitch	滚珠直径 Roller diameter	销轴直径 Pin diameter	附板尺寸 attachment size								厚度 plate thickness
Chain No.	P	d1 max	d2 max	G	G1	W	W1	h2	h3	d1	F	T
	mm	mm	mm	mm	mm	mm	mm	mm	mm	mm	mm	mm
08B-PB	12.7	8.51	4.45	9.5	12	36.4	55	8.9	10.4	4.5	25.4	1.5
08B-PB F1	12.7	8.51	4.45	9.5	12	36.4	50	8.9	10.4	4.5	25.4	1.5
08B-PB F2	12.7	8.51	4.45	9.5	12	36.4	40	8.9	10.4	4.5	25.4	1.5
12A-PB	19.05	11.91	5.94	15.9	16	56.8	80	11.9	14.3	6.8	40	2.4
12A-2 PB F1	19.05	11.91	5.94	15.9	33	77	85.5	11.9	14.3	5.5	60.88	2.4

天地链条
TD CHAIN

U型盖板链(单排)
Roller chain with U type attachments(simplex)

加外片 **A Type**
with outer plate

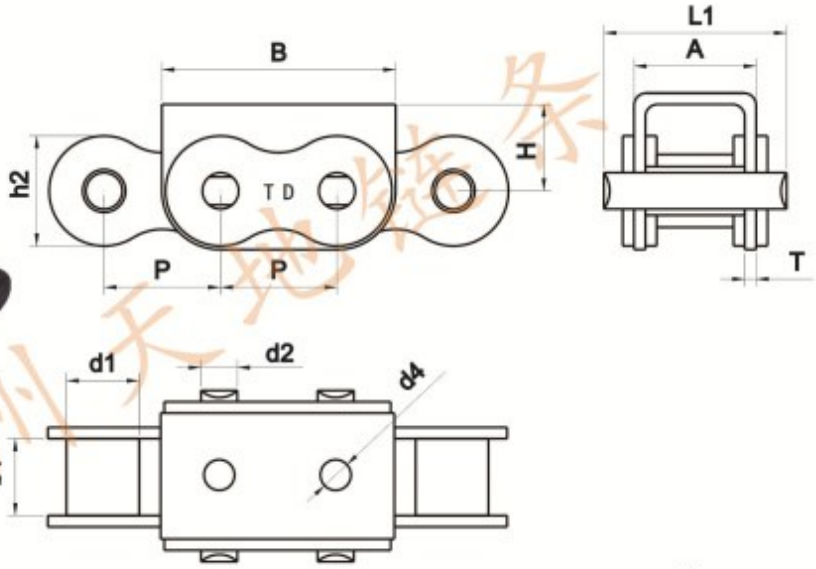

不加外片 **B Type**
without outer plate

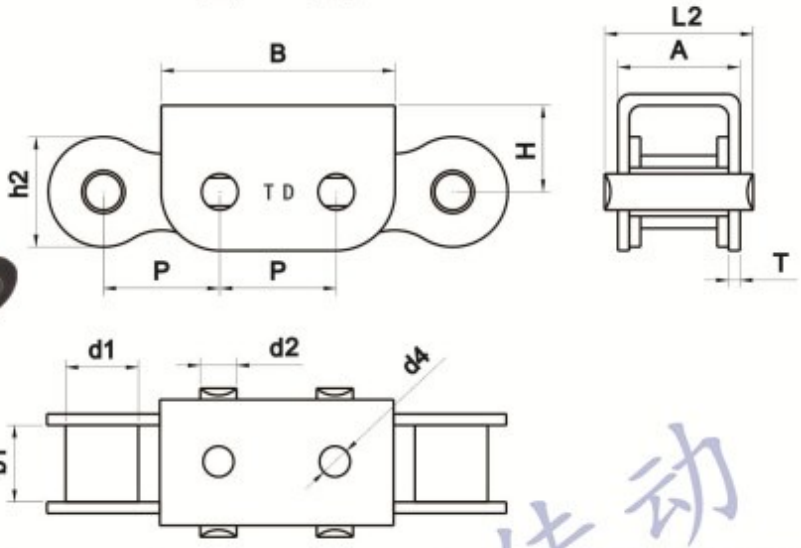

天地型号	节距 Pitch	滚珠直径 Roller diameter	内节内宽 Width between inner plates	销轴直径 Pin diameter	链片宽度 Plate depth	销轴长度 Pin length		U板尺寸 U plate size				形状 Type	U板厚度 U plate thickness	极限抗拉强度 Ultimate tensile strength	每米重量 Weight per meter
						A Type	B Type								
Chain No.	P	d1 max	b1 min	d2 max	h2 max	L1 max	L2 max	A	B	H	d4		T	Q min	q
	mm	mm	mm	mm	mm	mm	mm	mm	mm	mm	mm		mm	kN/lbf	kg/m
04C-U1	6.35	3.3	3.18	2.31	6	10.6	8.9	7	11.6	9.4	-	-	1	3.5/795	0.35
06B-U1	9.525	6.35	5.72	3.28	8	16.1	13.2	11.4	17.3	5.2	-	-	1.3	9/2045	0.7
08A-U1	12.7	7.95	7.85	3.96	12	19.4	16.6	14.2	24.2	8.3	4	-	1.5	14.1/3205	1.09
08B-U1	12.7	8.51	7.75	4.45	11.8	19.8	16.7	14.6	24.2	8.3	4	-	1.6	18/4091	1.13
10A-U1	15.875	10.16	9.4	5.08	15	23.5	20.5	17.4	30	12	5	-	1.5	18/4123	1.6
10B-U1	15.875	10.16	9.65	5.08	14.7	23	19.5	16.8	30	11.3	5	-	1.5	19/4318	1.53
12A-U1	19.05	11.91	12.57	5.94	16	30.7	25.9	21.4	36	13	5	-	1.85	27/6291	1.97
12B-U1	19.05	12.07	11.68	5.72	16	26.7	22.5	19.6	36	13	5	-	1.85	29/6591	1.9
16A-U1	25.4	15.88	15.75	7.92	24	37.2	31	27.5	47.5	16	7	-	2.42	42/9545	3.87
16A-U1F1	25.4	15.88	15.75	7.92	24	37.2	31	27.5	50.2	16	7	-	2.42	42/9545	3.92
16B-U1	25.4	15.88	17.02	8.28	21	39.7	33.7	29.05	49	15.4	6	-	1.5	58/13407	3.73
20A-U1	31.75	19.05	18.9	9.53	30	46	48	34.5	57	21.8	6.5	-	3	88.5/20114	5.9
20B-U1	31.75	19.05	19.56	10.19	26.4	48	41	36	57	21	8	-	3.5	85/19318	6.01
24A-U1	38.1	22.23	25.22	11.1	35.7	58.3	50.3	41	69	27.5	-	-	3	127/28864	9.6
24B-U1	38.1	25.4	25.4	14.63	33.2	61.6	52	47	72.6	28	10	-	4.5	160/36363	10.88
32A-U1	50.8	28.58	31.55	14.27	47.8	76.2	-	58.2	101	50	-	-	6.4	226.8/51545	
P27.5	27.5	11.91	12.57	5.94	16	30	25.7	23.5	45.5	13	6	-	2	27/6291	
P28.5	28.5	10.16	9.65	5.08	15	19.5	-	17	41.3	12.1	6	-	1.7		
C2050-U1	31.75	10.16	9.4	5.08	15	24	20	17.4	34.5	12	5	-	1.5	22.2/5045	
C2080-U1	50.8	15.88	15.75	7.92	24	40.5	32.5	29	68	22	-	-	3		

材质：碳钢、不锈钢
Material:carbon steel、stainless steel

U型盖板链(双排)
Roller chain with U type attachments(duplex)

加外片 **A Type**
With outer plate

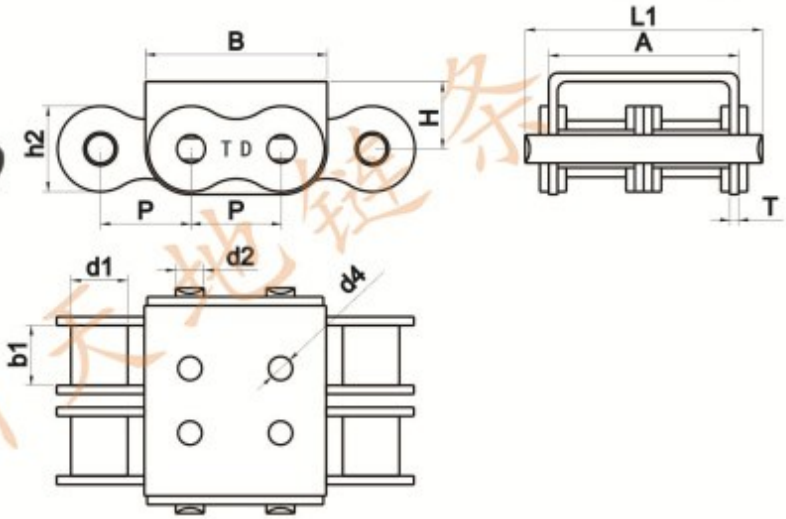

不加外片 **B Type**
Without outer plate

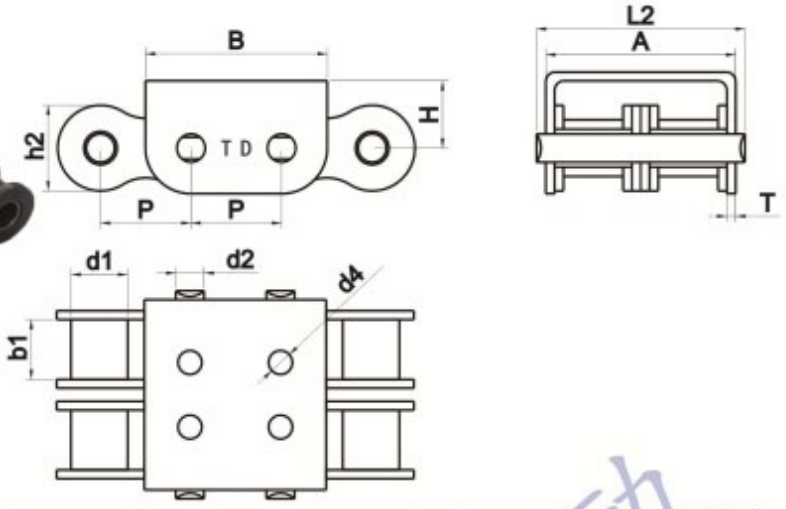

天地型号	节距 Pitch	滚珠直径 Roller diameter	内节内宽 Width between inner plates	销轴直径 Pin diameter	链片宽度 Plate depth	销轴长度 Pin length		U板尺寸 U plate size				形状 Type	U板厚度 U plate thickness	极限抗拉强度 Ultimate tensile strength	每米重量 Weight per meter
						A Type	B Type								
Chain No.	P	d1 max	b1 min	d2 max	h2 max	L1 max	L2 max	A	B	H	d4		T	Q min	q
	mm	mm	mm	mm	mm	mm	mm	mm	mm	mm	mm		mm	kN/lbf	kg/m
06B-U2	9.525	6.35	5.72	3.28	8	24	27	21.7	17.6	6.4		D	1.3		
08A-U2	12.7	7.95	7.85	3.96	12	34.2	31.2	28.4	24.2	8.3	4	-	1.5	32/7273	1.85
08B-U2	12.7	8.51	7.75	4.45	11.8	34.1	31.2	28.4	24.2	8.3	4	-	1.5	32/7273	1.96
08B-U2F1	12.7	8.51	7.75	4.45	11.8	34.1	31.2	28.4	23.1	8.3	5.5	-	1.5	32/7273	1.96
08B-U2F2	12.7	8.51	7.75	4.45	11.8	34.1	31.2	28.4	24.8	8.3	5.5	C	1.5	32/7273	1.96
08B-U2F3	12.7	8.51	7.75	4.45	11.8	34.1	31.2	28.4	24.8	8.3	5.5	D	1.5	32/7273	1.96
10A-U2	15.875	10.16	9.4	5.08	15	41.8	37.8	36	30	12.5	5	-	2	42.3/9822	2.6
10A-U2F1	15.875	10.16	9.4	5.08	15	41.8	37.8	35.5	30	12.5	5	-	1.5	40/9500	2.5
10A-U2F2	15.875	10.16	9.4	5.08	15	41.8	37.8	36	29.6	12.5	5	D	2	42.3/9822	2.6
10B-U2	15.875	10.16	9.65	5.08	14.7	39.5	35.9	33.3	30	11.3	5	-	1.5	44.5/10114	2.47
10B-U2F1	15.875	10.16	9.65	5.08	14.7	39.5	35.9	33.3	30	11.3	-	D	1.5	44.5/10114	2.47
12A-U2	19.05	11.91	12.57	5.94	16	51	47	44.5	36	13	5	-	1.85	55.3/12136	3.12
12A-U2F1	19.05	11.91	12.57	5.94	16	51	47	44.5	33.7	26.9	-	-	1.85	55.3/12136	
12A-U2F2	19.05	11.91	12.57	5.94	16	51	47	44.5	36	13	-	D	1.85	55.3/12136	3.12
12A-U3	19.05	11.91	12.57	5.94	16	65.8	61	57	34	13	-	-	1.85	95.4/21682	4.86
12B-U2	19.05	12.07	11.68	5.72	16	45.3	42.9	39.1	36	12	5	-	1.85	57.8/13136	3.03
12B-U2F1	19.05	12.07	11.68	5.72	16	46.6	42.9	39.1	34	12	5	-	1.85	57.8/13136	3.03
12B-U2F2	19.05	12.07	11.68	5.72	16	45.3	42.9	39.1	33	12	4.2	-	1.85	57.8/13136	3.03
12B-U2F3	19.05	12.07	11.68	5.72	16	45.3	42.9	39.1	36	12	-	D	1.85	57.8/13136	3.03
16A-U2	25.4	15.88	15.75	7.92	24	66.7	61.2	57.2	46	16	7	-	2.42	115/30124	6.1
16B-U2	25.4	15.88	17.02	8.28	21	71.7	67	60.93	49	16.2	6	-	1.5	106/26094	6.97
20A-U2	31.75	19.05	18.9	9.53	30	85	88	71	58	22.5	6.5	-	3.8		
24A-U2	38.1	22.23	25.22	11.1	35.7	104	94.4	88	75.2	29	-	-	4		19
24B-U2	38.1	25.4	25.4	14.63	33.2	111.1	114	95.7	71.5	46.1	-	-	5		

材质：碳钢、不锈钢
Material:carbon steel、stainless steel

非标平板链
Roller chain with special flat attachments

平板与链条 固定方式有:
焊接(Type A)　铆钉（Type B,平板需带孔）

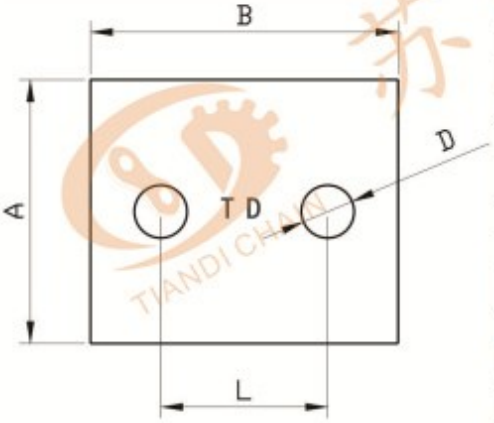

天地型号	附板尺寸 attachment size					固定方式 Fixed mode
Chain No.	A	B	D	L	T	Type
	mm	mm	mm	mm	mm	
08B-U1-PB-F1	8.4	21.25	3.7	12.7	4	B
12B-U2-PB-F1	30	35	2-6	19.05	3	B
12B-U2-PB-F2	36	39	2-6.5	20	4	B
12B-U2-PB-F3	35	76	4-5	19.05	5	B
12B-U2-PB-F4	35	70	-	-	4	A
12A-2-K1-PB-F2	27	35	2-6	23	2.4	B
12A-2-K1-PB-F3	32	40	4-6	24	2.4	B
12A-2-K1-PB-F4	27	45	2-6.8	25	2.4	B
12A-2-K1-PB-F5	27	48	2-6.1	23	2.4	B
12A-2-K1-PB-F6	24	84	2-6.5	61	2.4	B
12A-G2-PB-F7	50	55	7	-	2.4	B
12A-2-K1-PB-F8	33	85.4	5	61	2.4	B
16A-2-K1-PB-F1	24	72.8	8	53.8	3	B
16A-2-K1-PB-F2	14.6	76.8	4-5	19.05	3	B
C2060-PB	28	50	-	-	5	A

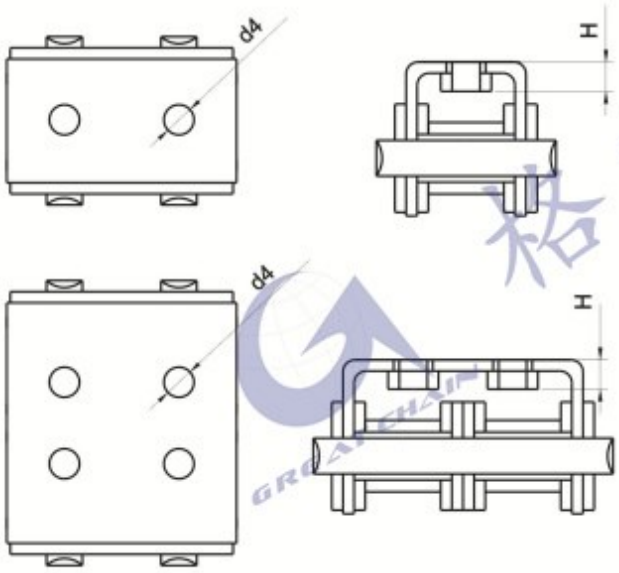

天地型号	螺母尺寸 Nut size	
Chain No.	d4	H
	mm	mm
08A-U1-GS	M3/M4	5/6
08B-U1	M3/M4	5/6
10A-U1	M4/M5	6/7
10B-U1	M4/M5	6/7
12A-U1	M4/M5	6/7
12B-U1	M4/M5	6/7
16A-U1	M5/M6	7/8
16B-U1	M5/M6	7/8
20A-U1	M6/M8	8
20B-U1	M6/M8	8
24A-U1	M6/M8	8
24B-U1	M6/M8	8
08A-U2	M3/M4	5/6
08B-U2	M3/M4	5/6
10A-U2	M4/M5	6/7
10B-U2	M4/M5	6/7
12A-U2	M4/M5	6/7
12B-U2	M4/M5	6/7
16A-U2	M5/M6	7/8
16B-U2	M5/M6	7/8
20A-U2	M6/M8	8

其余参数参照标准

04C-U1-F2

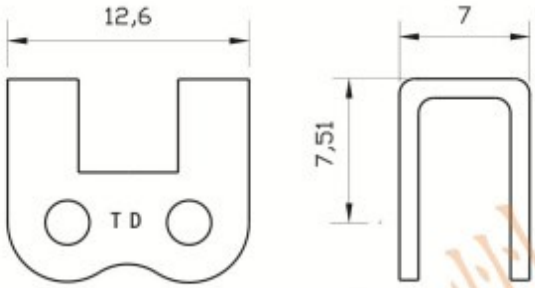

A2040-U1

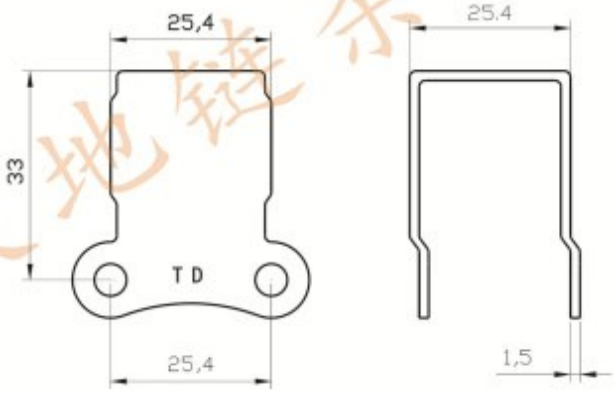

橡胶链
Roller chain with vulcanised elastomer profiles

加外片 **A Type**
with outer plate

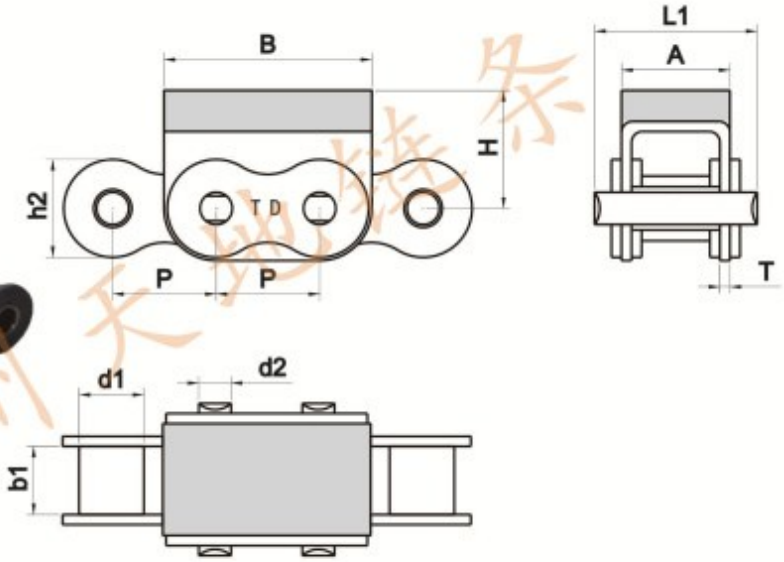

不加外片 **B Type**
without outer plate

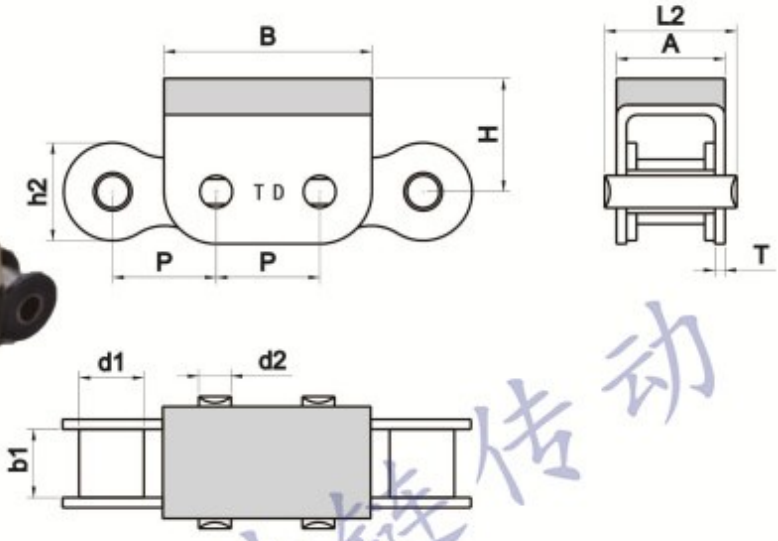

天地型号	节距 Pitch	滚珠直径 Roller diameter	内节内宽 Width between inner plates	销轴直径 Pin diameter	链片宽度 Plate depth	销轴长度 Pin length		橡胶块尺寸 Plate and attachment size			U板厚度 U plate thickness	极限抗拉强度 Ultimate tensile strength	每米重量 Weight per meter
						A Type	B Type						
Chain No.	P	d1 max	b1 min	d2 max	h2 max	L1 max	L2 max	A	B	H	T	Q min	q
	mm	mm	mm	mm	mm	mm	mm	mm	mm	mm	mm	kN/lbf	kg/m
04C-G1	6.35	3.3	3.18	2.31	6	10.6	8.9	7	11.5	14.1	1	3.5/795	0.38
06B-G1	9.525	6.35	5.72	3.28	8.2	16.1	13.2	11.4	17.3	7.5	1.3	9/2045	0.8
08B-G1	12.7	8.51	7.75	4.45	11.8	19.4	16.4	14.6	24.2	12.3	1.5	18/4091	1.19
08B-G1F80	12.7	8.51	7.75	4.45	11.8	19.4	16.4	14.6	24.2	13.8	1.5	18/4091	1.2
10A-G1	15.875	10.16	9.4	5.08	15	24	21	17.5	30	17	1.5	21.8/4953	1.7
10B-G1	15.875	10.16	9.65	5.08	14.7	23	19.5	16.8	30	17	1.5	19/4318	1.62
12A-G1	19.05	11.91	12.57	5.94	18	32	27.2	21.4	36	17	1.85	31.8/7153	2.55
12B-G1	19.05	12.07	11.68	5.72	16	26	22.3	19.6	36	17	1.85	57.8/13136	2.01
16A-G1	25.4	15.88	15.75	7.92	24	37.2	30.8	27.5	46	20	2.42	42/9545	3.97
16B-G1F12	25.4	15.88	17.02	8.28	21	41	34.8	29.05	49	20	1.5	58/13047	3.83
20A-G1	31.75	19.05	18.9	9.53	30	46.8	40.8	34	57.6	28	3.1	86.7/19503	6.15
20B-G1	31.75	19.05	19.56	10.19	26.4	48	41	36	57	27	3.5	85/19318	6.19
24A-G1	38.1	22.23	25.22	11.1	35.7	58.3	50.3	46	75.2	35	4	127/28864	10.7
24B-G1	38.1	25.4	25.4	14.63	33.2	61.6	52	47	72.6	34	4.5	160/36363	11.25
32A-G1	50.8	28.58	31.55	14.27	47.8	76.2	-	58.2	100.4	59	6.4	226.8/51545	

橡胶链
Roller chain with vulcanised elastomer profiles

加外片 **A Type**
with outer plate

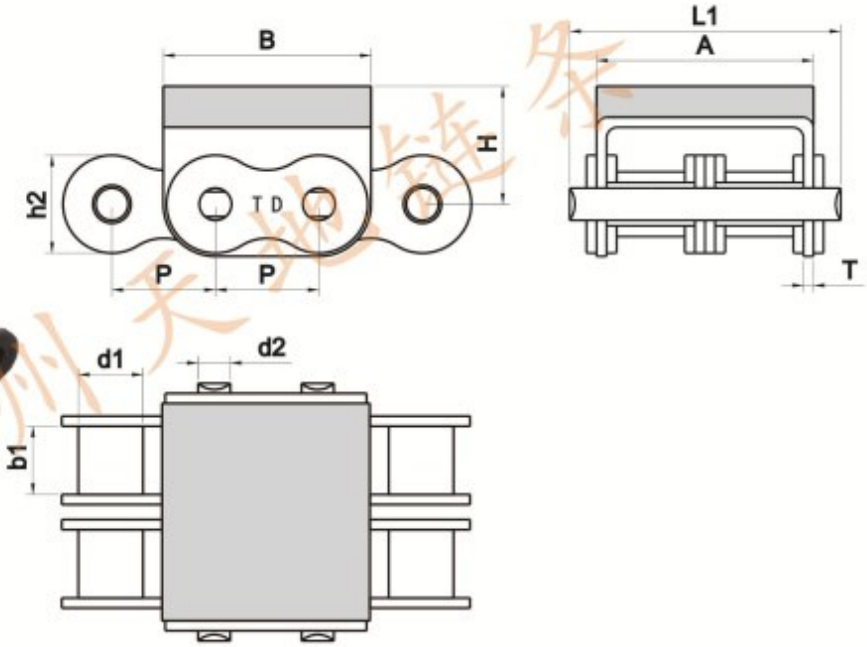

不加外片 **B Type**
without outer plate

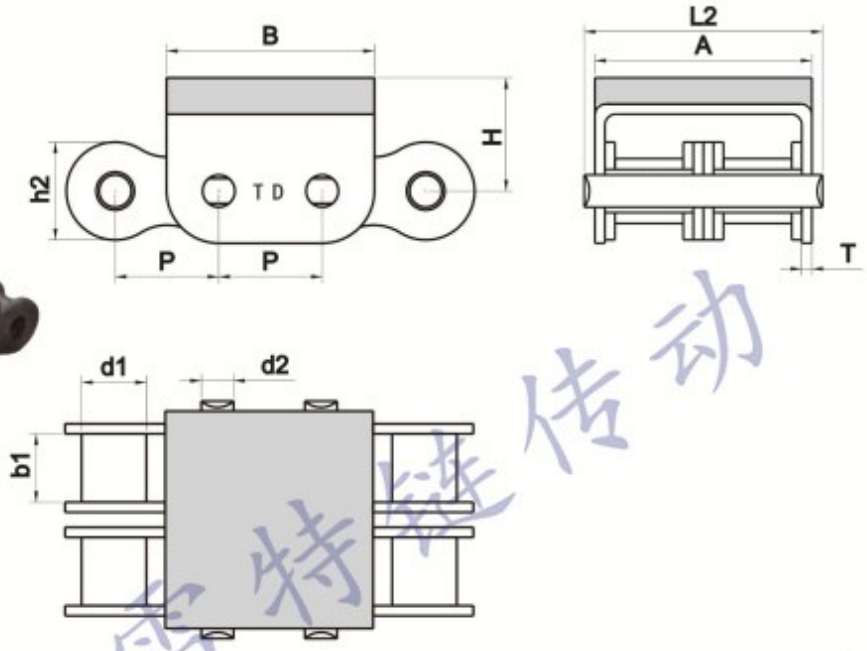

天地型号	节距 Pitch	滚珠直径 Roller diameter	内节内宽 Width between inner plates	销轴直径 Pin diameter	链片宽度 Plate depth	销轴长度 Pin length		橡胶块尺寸 Plate and attachment size			U板厚度 U plate thickness	极限抗拉强度 Ultimate tensile strength	每米重量 Weight per meter
						A Type	B Type						
Chain No.	P	d1 max	b1 min	d2 max	h2 max	L1 max	L2 max	A	B	H	T	Q min	q
	mm	mm	mm	mm	mm	mm	mm	mm	mm	mm	mm	kN/Ibf	kg/m
08B-G2	12.7	8.51	7.75	4.45	11.8	34	31.2	28.4	24.2	12.3	1.5	32/7273	2.07
10A-G2	15.875	10.16	9.4	5.08	15	41.8	37.8	36	30	17	2	42.3/9822	2.72
10B-G2	15.875	10.16	9.65	5.08	14.7	38.4	35.4	33.3	30	16	1.5	44.5/10114	2.56
12A-G2	19.05	11.91	12.57	5.94	16	51	46.1	44.5	36	17	1.85	55.3/12136	3.31
12B-G2	19.05	12.07	11.68	5.72	16	46.6	42.9	39.1	36	16	1.85	57.8/13136	3.21
12B-G2F81	19.05	12.07	11.68	5.72	16	46.6	42.9	39.1	36	28.4	1.85	57.8/13136	
16A-G2	25.4	15.88	15.75	7.92	24	66.7	60.2	57.2	46	20	2.42	115/30124	7.27
16B-G2	25.4	15.88	17.02	8.28	21	73.2	67	60.93	49	22	1.5	106/26094	7.35
20A-G2	31.75	19.05	18.9	9.53	30	85	88	71.8	58	28	3.8		
C20B-G2	31.75	19.05	29.56	10.19	26.4	85	78	73	58.15	27	3.5	170/38217	10.4

橡胶链
Roller chain with vulcanised elastomer profiles

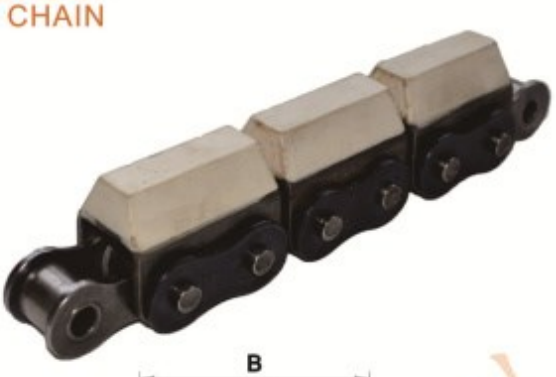

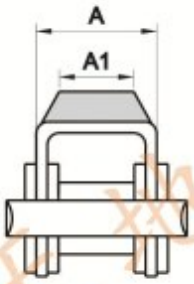

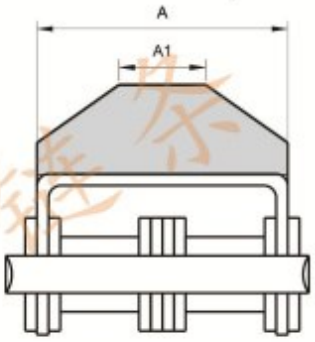

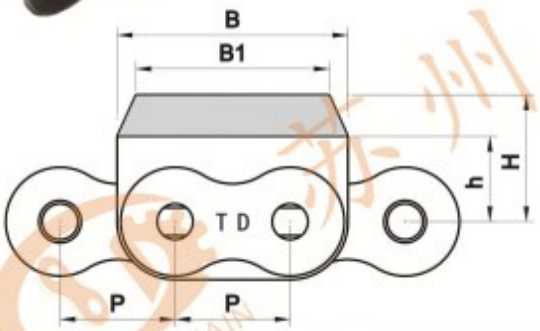

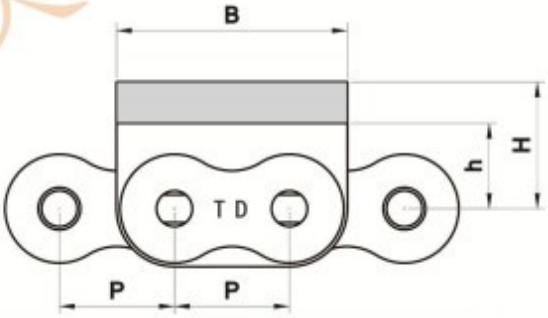

天地型号	节距 Pitch	橡胶块尺寸 Plate and attachment size					
Chain No.	P	A	A1	B	B1	h	H
	mm	mm	mm	mm	mm	mm	mm
08B-G1F12	12.7	14.6	11.66	24.2	21.45	8.3	24
08B-G1F14	12.7	14.6	12	24.2	21.48	8.3	16
08B-G1F17	12.7	14.6	6.86	24.2	-	8.3	20.2
10A-G1F6	15.87	16.8	-	30	-	11.3	14
10B-G1F5	15.875	16.8	13.5	30	-	11.3	25.3
10B-G2F5	15.875	33.3	29.4	36	-	11.3	25.3
12A-G1F1	19.05	26	17	36	-	13	16
12A-G1F12	19.05	39.1	-	36	-	13	21
12B-G1F11	19.05	19.6	13.5	36	-	13	17
12B-G1F14	19.05	38.2	37.4	35	34.2	11.5	16
12A-G2F12	19.05	39.1	-	36		13	21
12B-G2F5	19.05	39.1	-	36	-	12	28
12B-G2F10	19.05	39.1	34	36	-	12	28
12B-G2F12	19.05	39.1	34.4	36	32.83	12	21
12B-G2F14	19.05	39.1	34	36	34	12	34
C12B-G2F22	19.05	39.1	37	36	30	12	28
16A-G1F1	25.4	27.5	-	46	-	16	21.4
16A-G1F3	25.4	27.5	22	49	47.1	16	21.4
16A-G1F4	25.4	27.5	25.6	49.2	-	16	20
16B-G1F12	25.4	29.05	24.5	49	-	15.4	21.4
16B-G1F18	25.4	29.05	-	49	-	15.4	32
20A-G1	31.75	34	30	57.65	55.5	22	28
C20A-G1	31.75	34	30	61.75	59.63	22	28
20B-G1F1	31.75	36	-	57	-	21	35
C20B-G1	31.75	36	30	57	54.88	21	27
C20B-G2	31.75	73	60	58.15	56	21	27
24A-G1F1	38.1	55.5	50.4	70	66.2	24.5	46.5
C24B-G1	38.1	47	44	72.6	-	28	34

橡胶链
Roller chain with vulcanised elastomer profiles

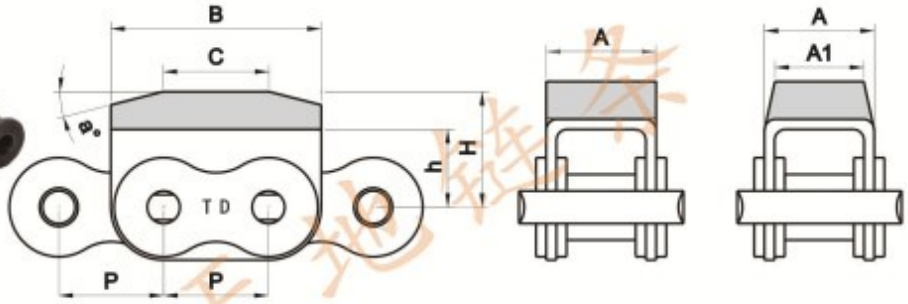

天地型号	节距 Pitch	橡胶块尺寸 Plate and attachment size						
Chain No.	P	A	A1	B	C	a	h	H
	mm	mm	mm	mm	mm	mm	mm	mm
08B-G1F14	12.7	14.6	-	24.2			8.3	16
08B-G2F1	12.7	28.4	25.4	24.2	9	9	8.3	12
08B-G2F15	12.7	28.4	25.4	24.2	9	15	8.3	12.8
08B-G2F22	12.7	28.4	25.4	24.2			8.3	12
C16AG1F7	25.4	27.5	26.4	49	25	15	16	21.4
16B-G1	25.4	29.05	-	49	25	15	15.4	21.4
16B-G1F11	25.4	29.05	-	49	41	15	15.4	21.4
C16B-G2	25.4	60.93	-	49	25	15	15.4	21.4
20B-G1F2	31.75	36	-	57			21	35
24B-G1F1	38.1	47	39.6	72.6	32.6	11	28	34
24B-G1F7	38.1	47	44	72.6	35	12	28	34

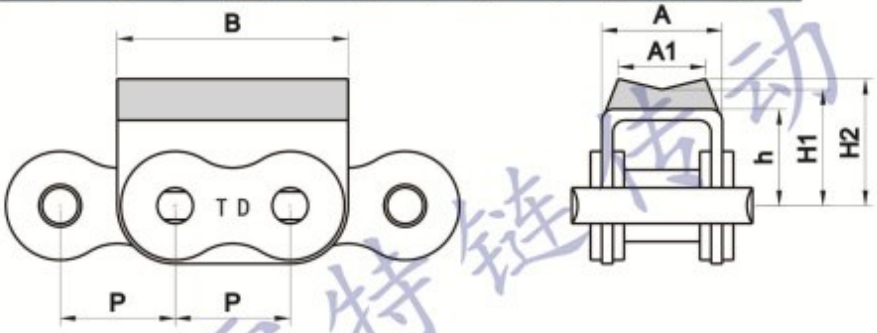

天地型号	节距 Pitch	橡胶块尺寸 Plate and attachment size					
Chain No.	P	A	A1	B	h	H1	H2
	mm	mm	mm	mm	mm	mm	mm
08B-G1F9	12.7	14.6	11	24.2	8.3	10.8	12.3
08B-G2F11	12.7	28.4	26.6	24.2	8.3	18.3	20.1
12B-G1F1	19.05	19.6	14.5	36	13	16	18
12B-G1F13	19.05	19.6	14.2	36	13	19.1	21
12B-G1F80	19.05	15.4	12.8	33.8	13	26	28
12B-G2F4	19.05	39.1	35	36	12	24.5	27.5
12B-G2F13	19.05	39.1	24	36	12	24.5	27.5
12B-G2F80	19.05	37	16	35	12	28	29.6

橡胶链
Roller chain with vulcanised elastomer profiles

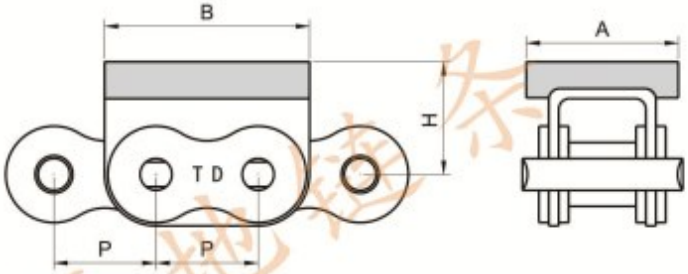

天地型号	节距 Pitch	橡胶块尺寸 Plate and attachment size		
Chain No.	P	A	B	H
	mm	mm	mm	mm
08B-G1F1	12.7	18	24.2	12.3
10B-G1F2	15.875	25	30	14
10B-G1F3	15.875	20	30	18
10B-G1F4	15.875	18.6	30	11.4

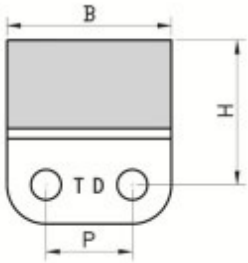

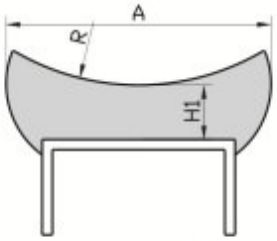

天地型号	节距 Pitch	橡胶块尺寸 Plate and attachment size				
Chain No.	P	A	B	H	H1	R
	mm	mm	mm	mm	mm	mm
08B-G2F16	12.7	44	24.2	26.3	8	27
08B-G2F17	12.7	39	24.2	21.3	8	36

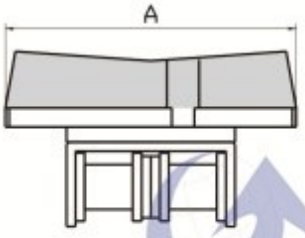

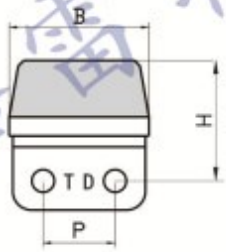

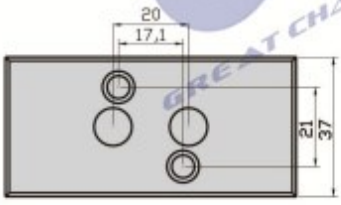

天地型号	节距 Pitch	橡胶块尺寸 Plate and attachment size		
Chain No.	P	A	B	H
	mm	mm	mm	mm
12B-G2F3	19.05	77	37	36
12B-G2F8	19.05	101	37	36

05B-G1

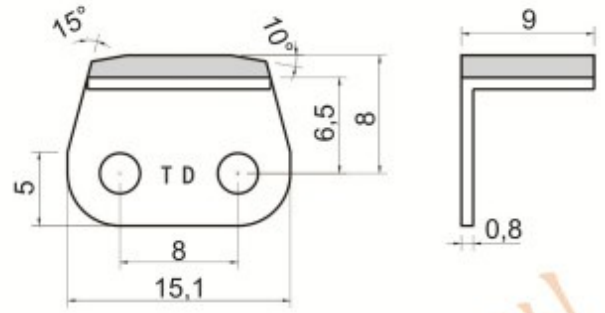

06CWSA2-G1F3

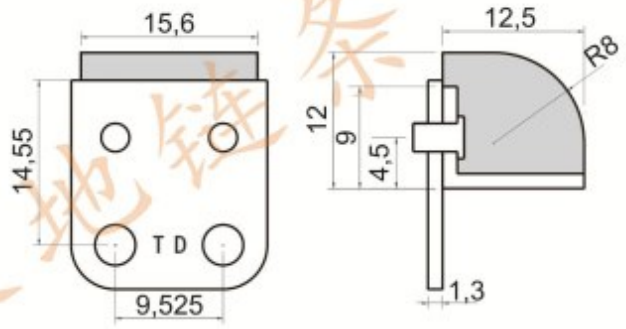

06B-G1 F9

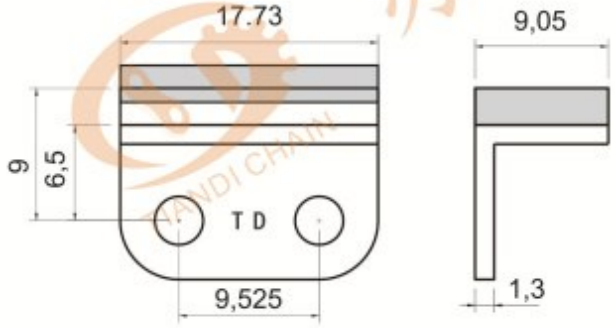

08B-G1F4

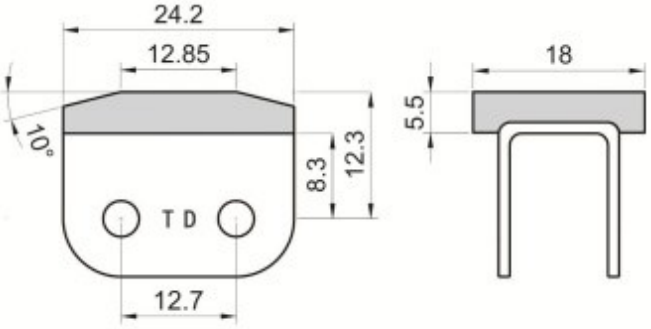

08B-G1F6

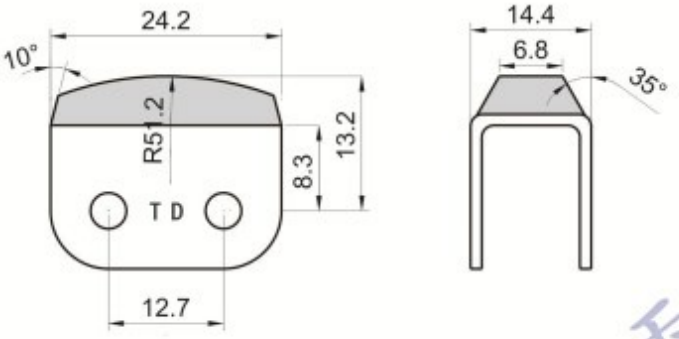

08B-G1F13

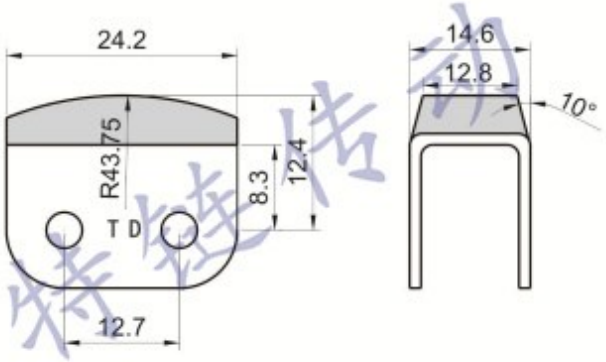

08B-G1F15

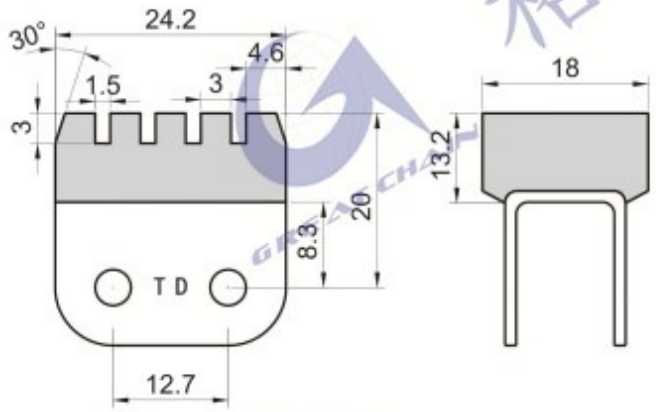

08B-G1F16

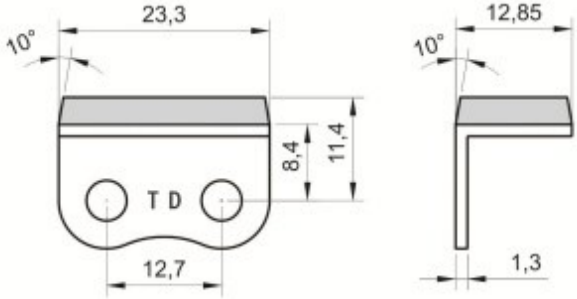

橡胶链
Roller chain with vulcanised elastomer profiles

08B-G2F2

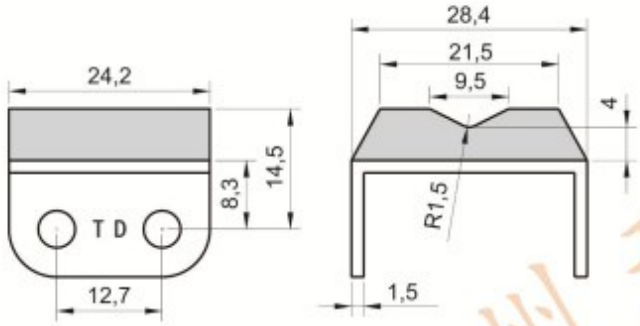

08B-G2F5

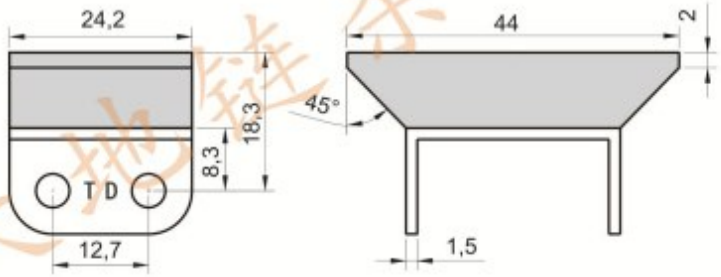

08B-G2F7

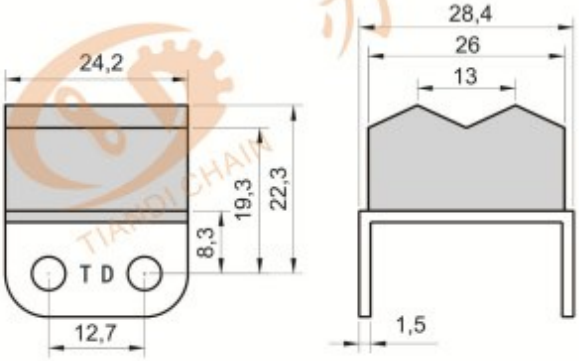

08B-G2F8

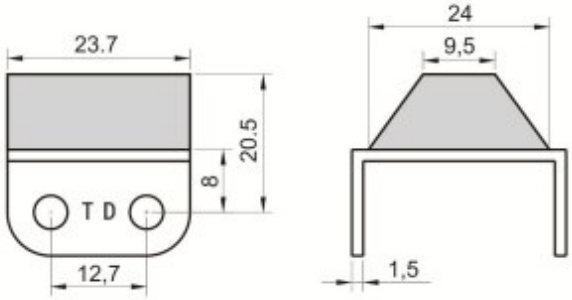

08B-G2F10

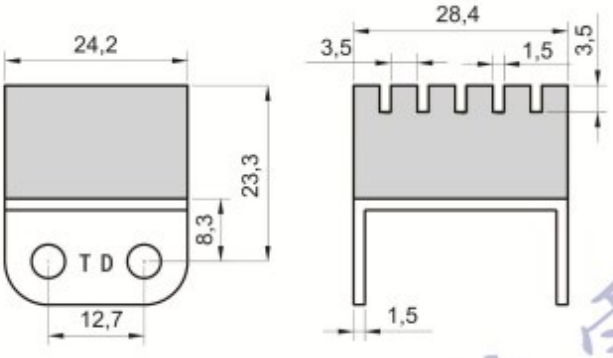

08B-G2F13

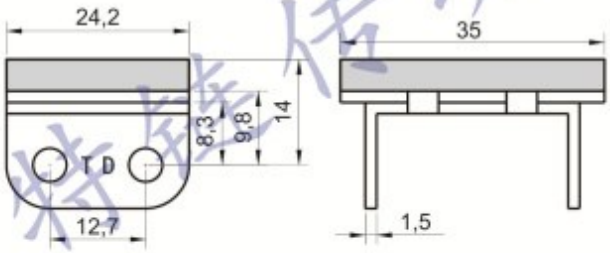

08B-G2F14

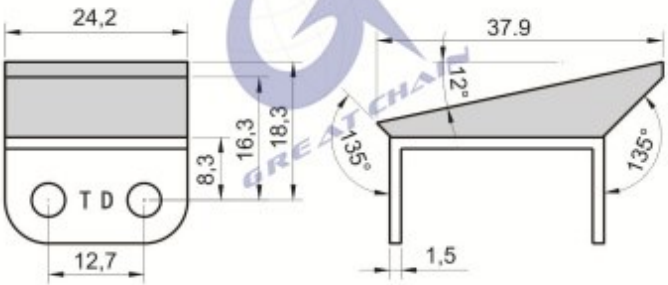

08B-G2F18

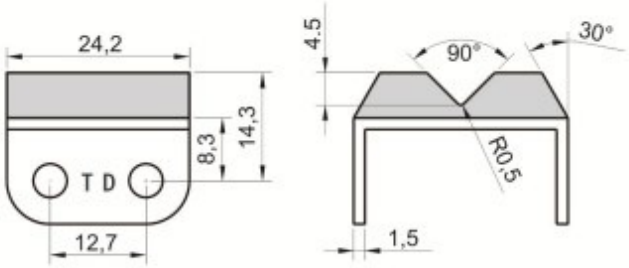

08B-G2F45

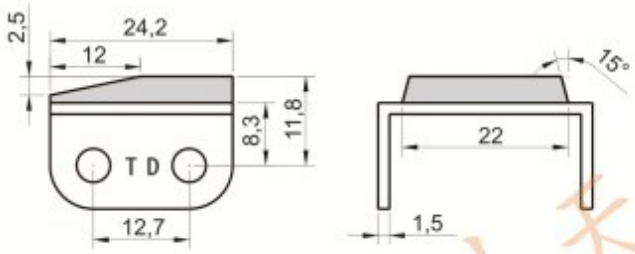

08B-WK2 F4

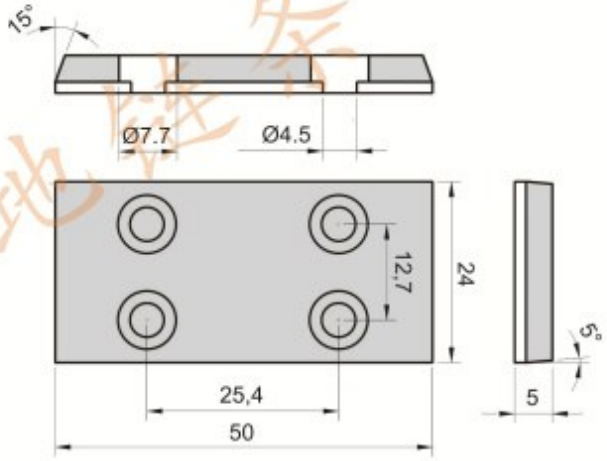

08B-G2F80

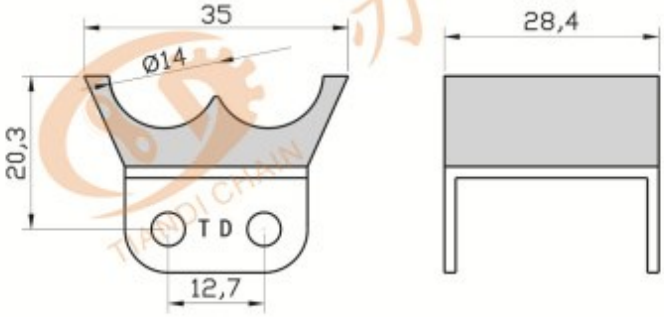

10A-G2F1

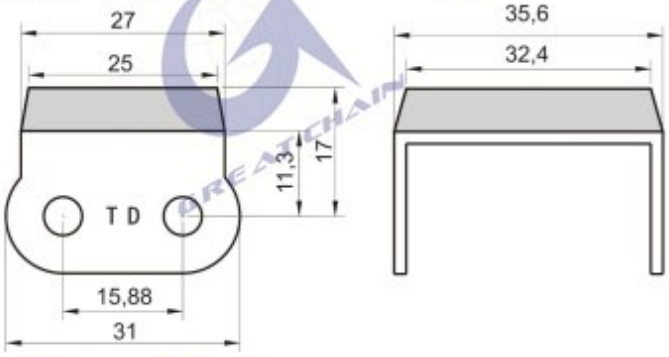

10B-G2F6

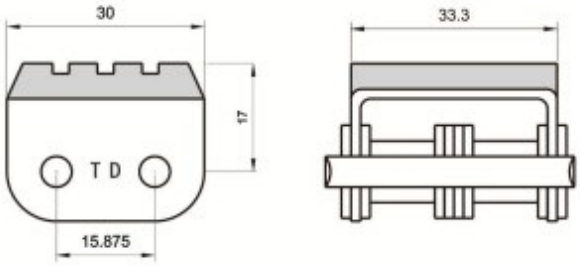

橡胶链
Roller chain with vulcanised elastomer profiles

12A-G1F1 A1

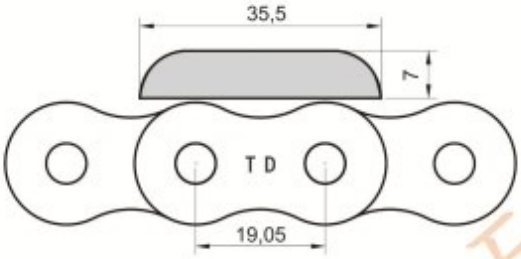

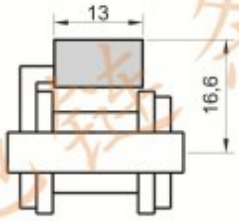

12A-G2F15-1

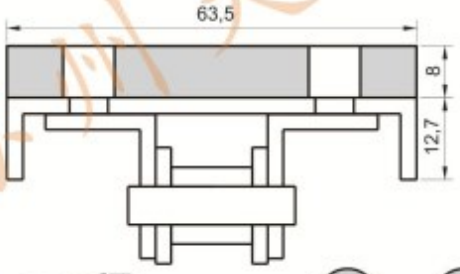

12A-G2F15-2

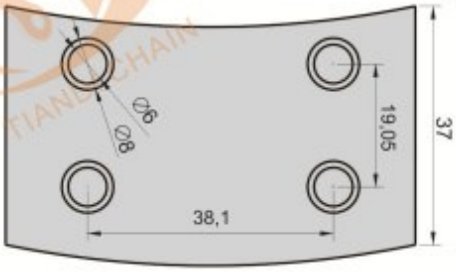

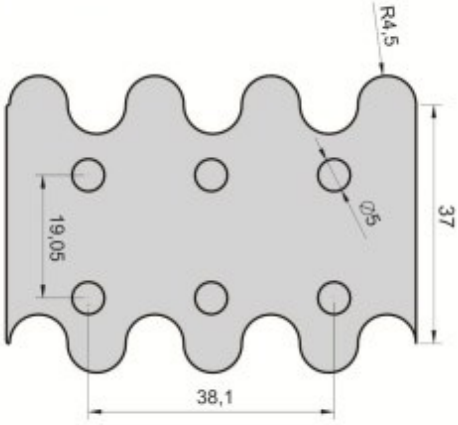

12A-G1 F80

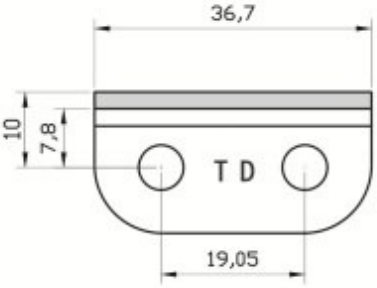

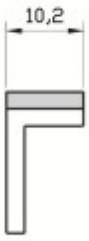

12A-G2 F81

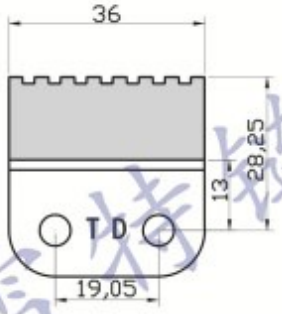

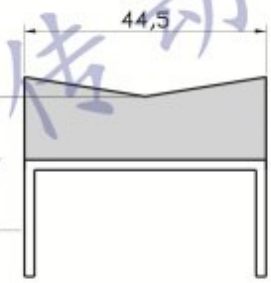

12A-G1 F82

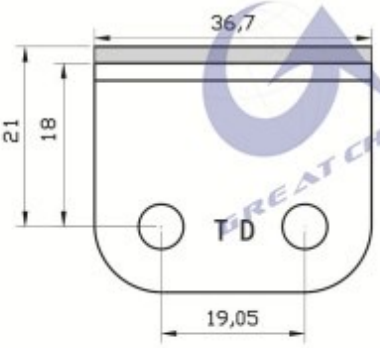

12A-2 WK2-G2F82

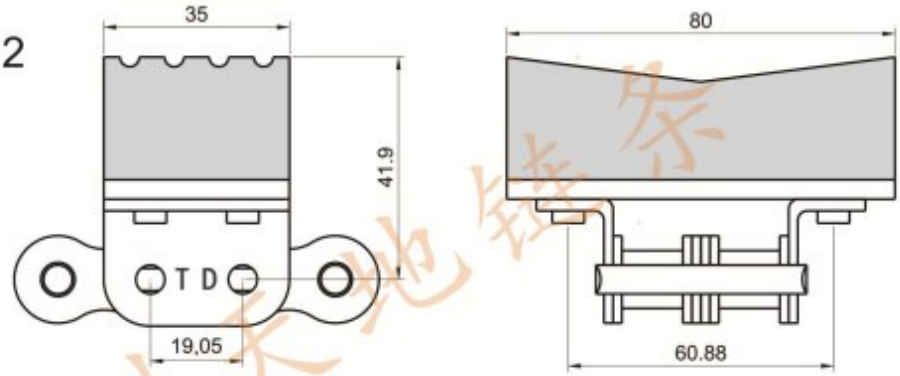

12A-G2 K183

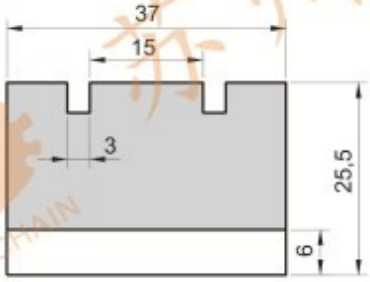

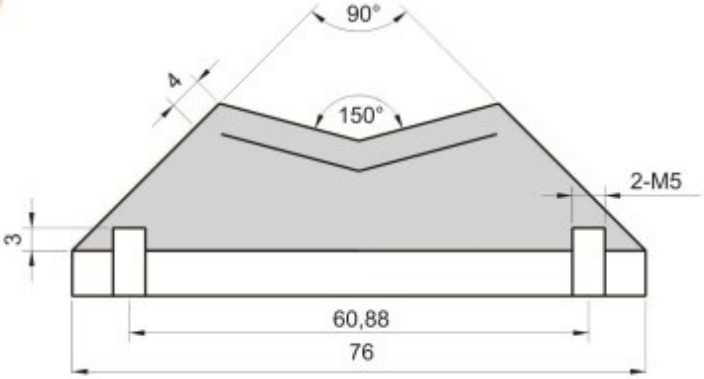

12A-G2 WK1F84

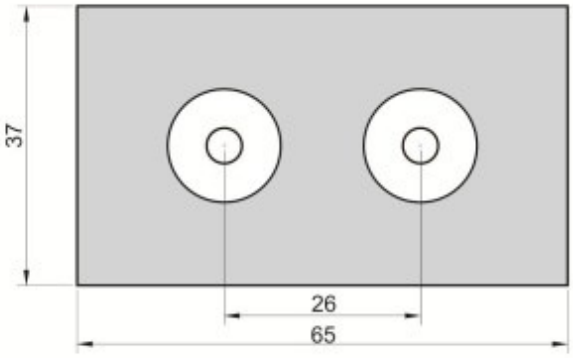

12A-G2 F85

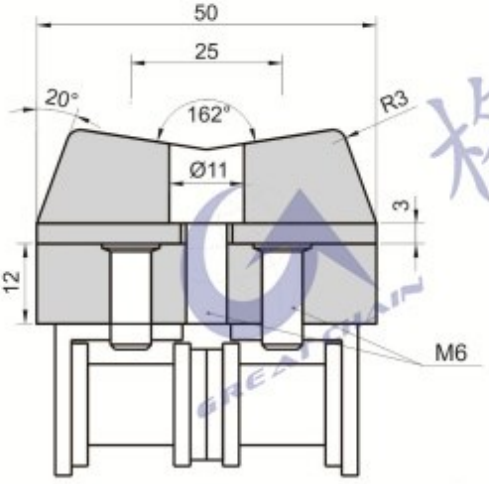

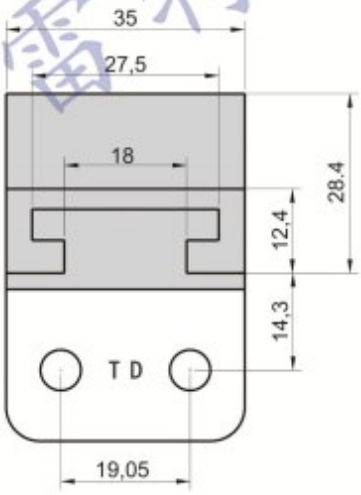

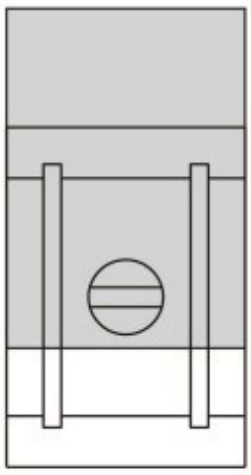

橡胶链
Roller chain with vulcanised elastomer profiles

12B-G1F2

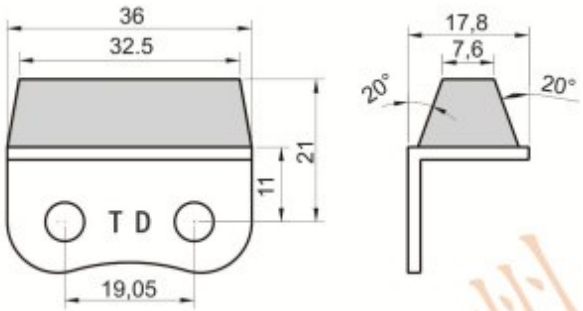

12B-G1F9

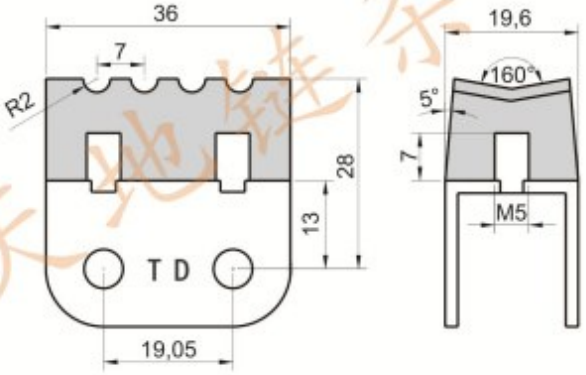

12B-G1F80

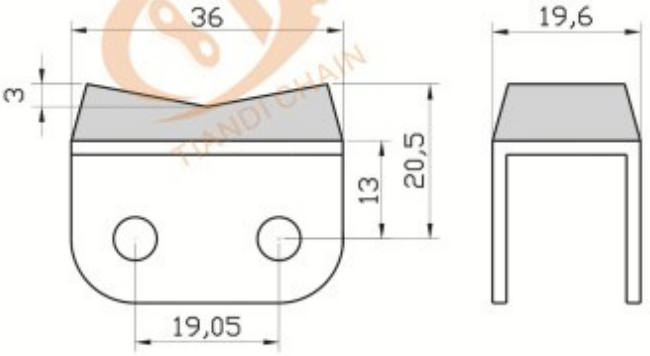

12B-G1F81

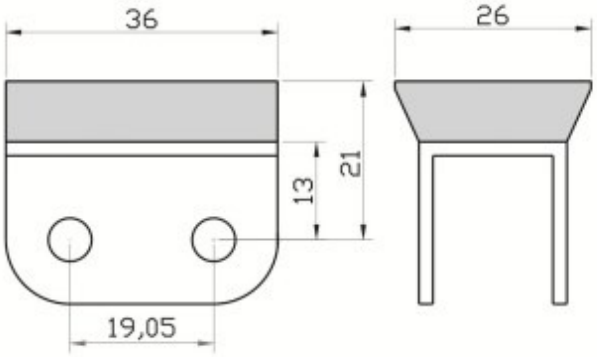

12B-G2F5

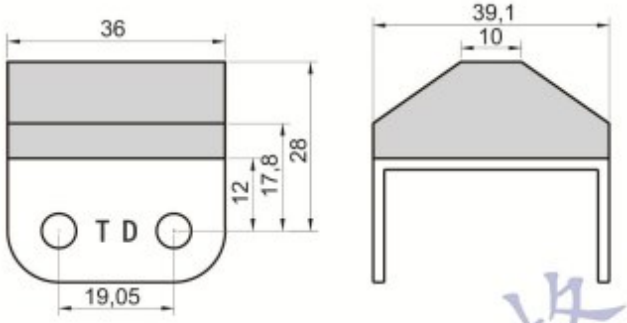

12B-G2F6

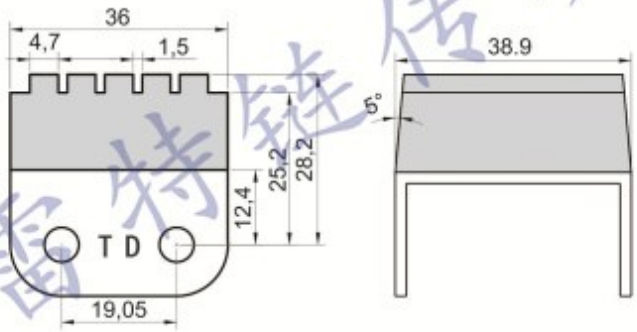

12B-G2 F35

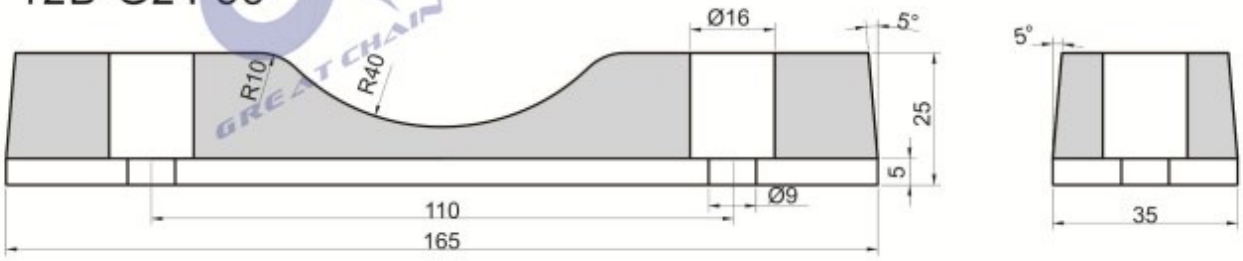

16A-G1F1

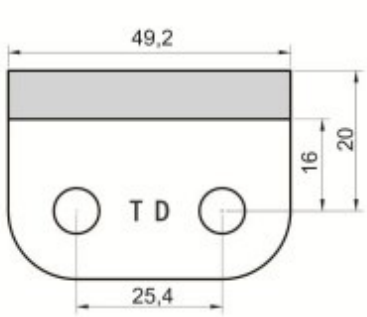

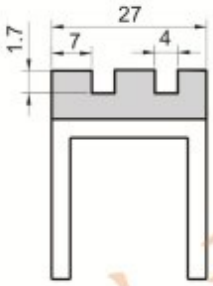

16A-G1F3

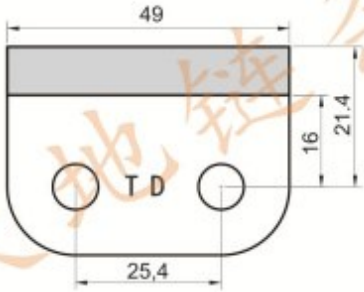

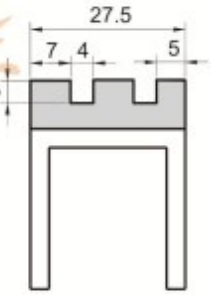

16A-G1F80

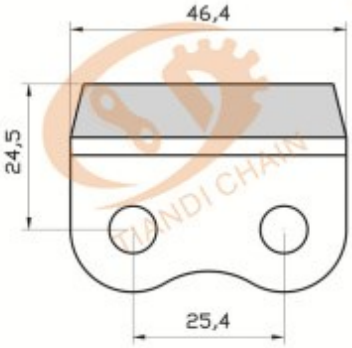

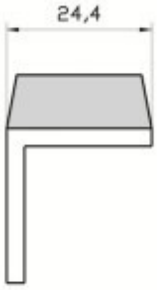

16B-G1F7外片

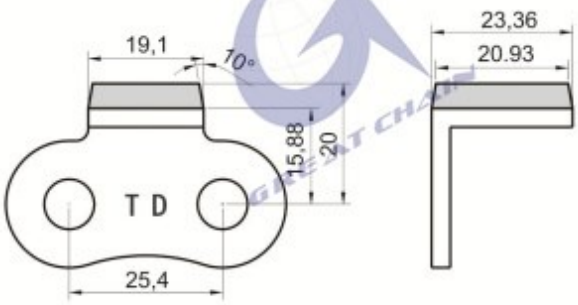

16B-G1F7内片

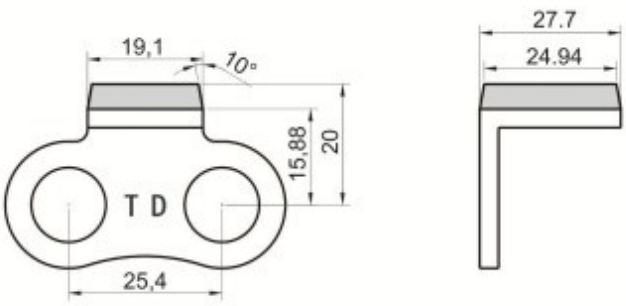

橡胶链
Roller chain with vulcanised elastomer profiles

16B K1F34

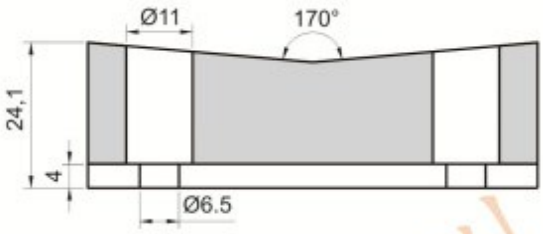

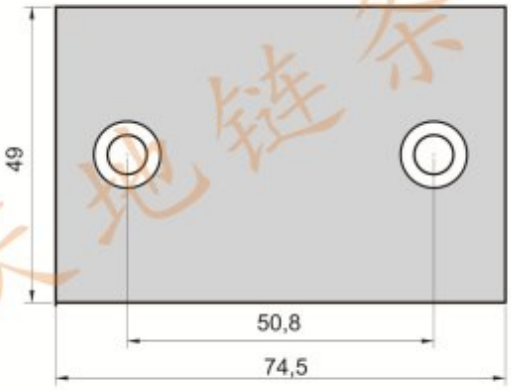

16B-G1 F8

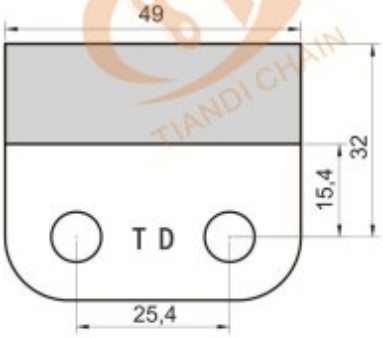

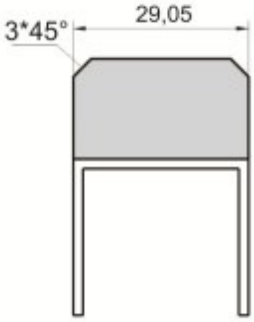

20B-G1F2

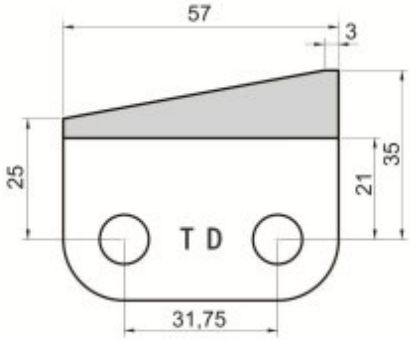

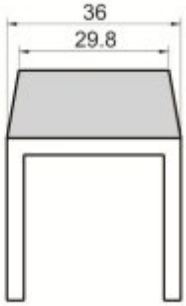

KG-F1

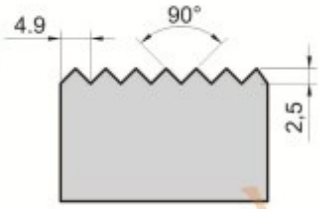

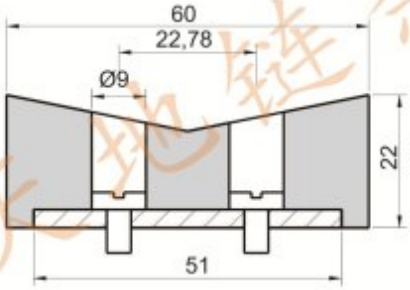

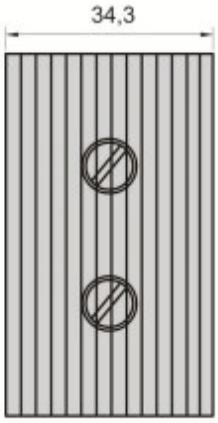

12A-2K1 KG-F2

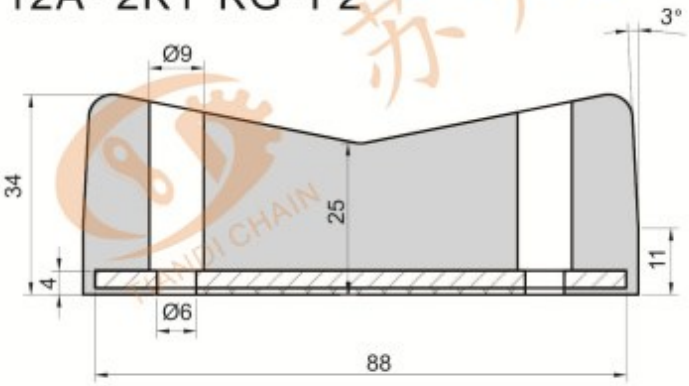

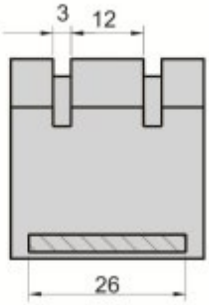

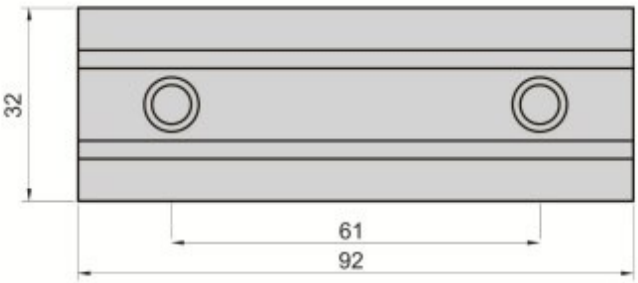

12A-2K1内弯 KG-F3

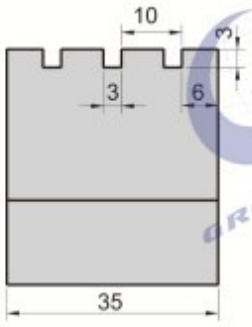

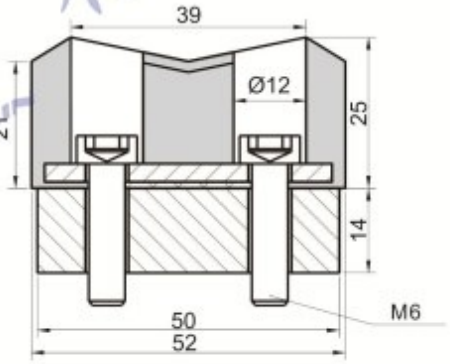

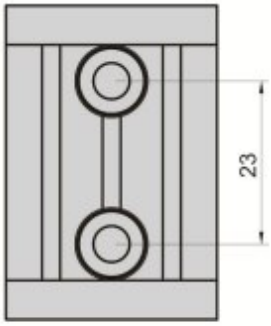

橡胶链
Roller chain with vulcanised elastomer profiles

KG-F4

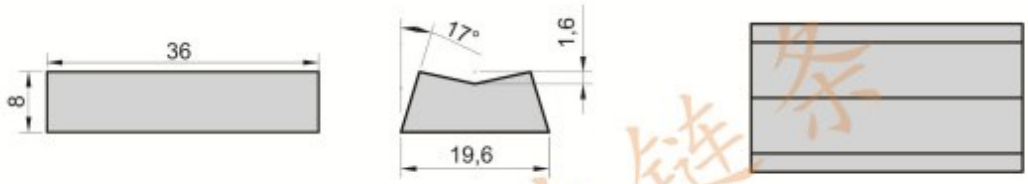

KG-F5

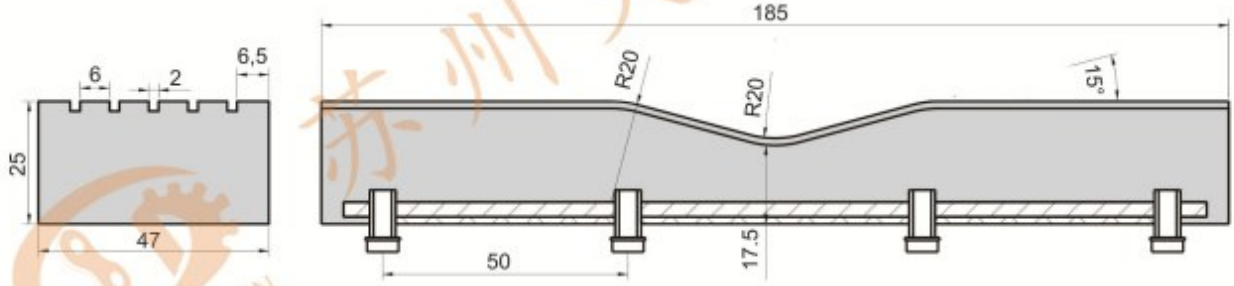

KG-F6

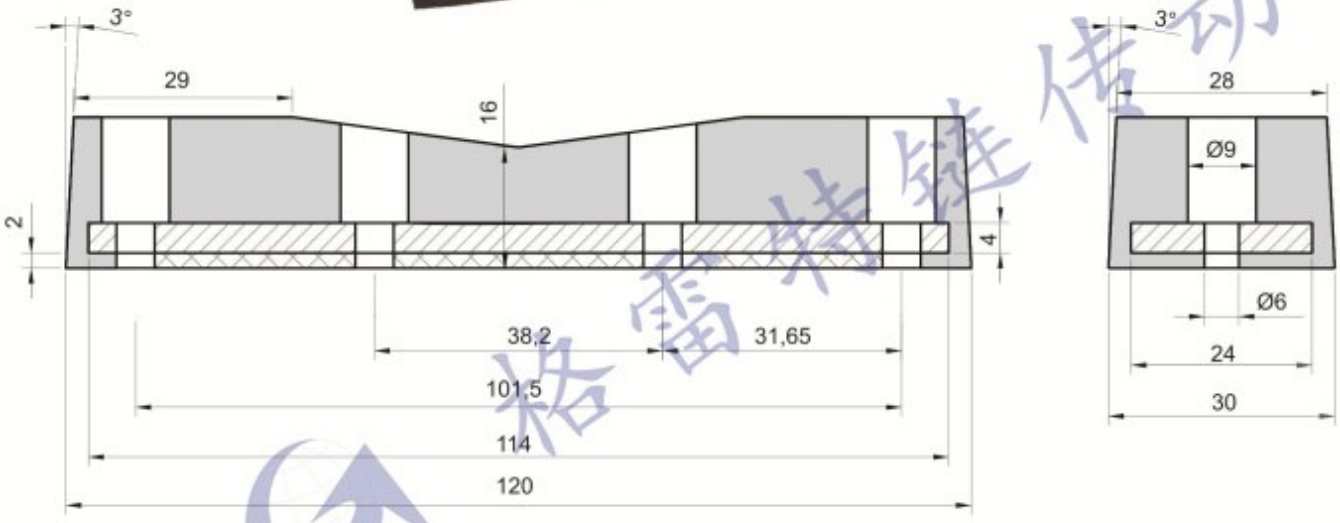

12B-2 K1 KG-F1

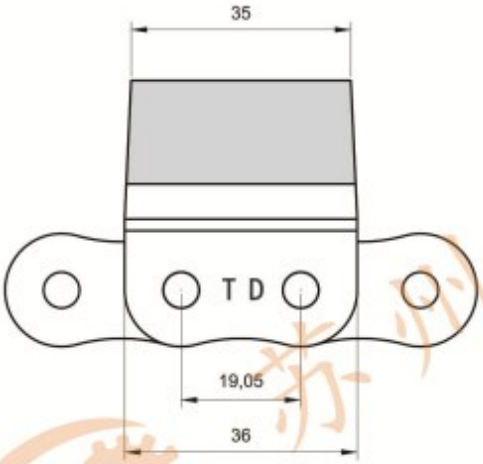

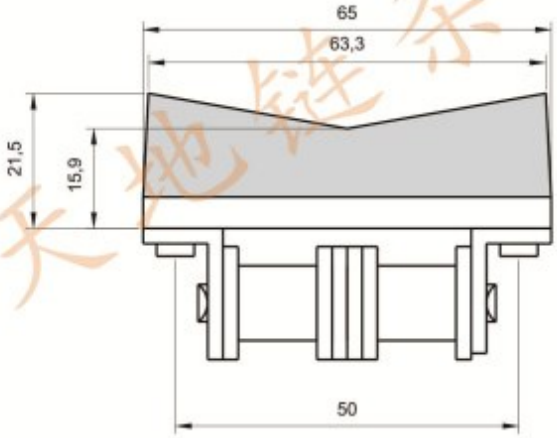

16B-2 K1 KG-F1

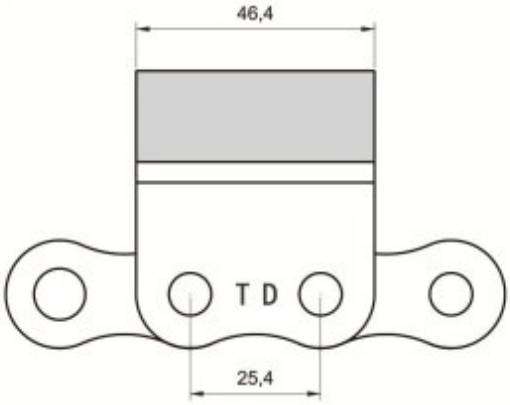

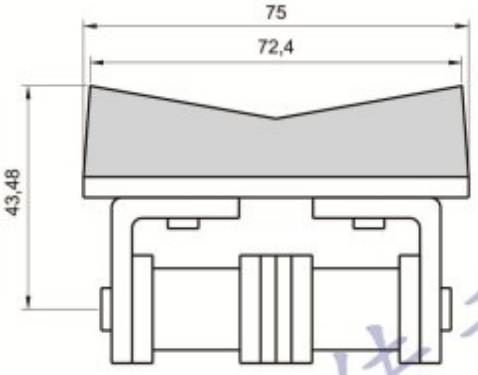

板式链（AL）
Leaf chains (AL)

链板组合
Plate lacing

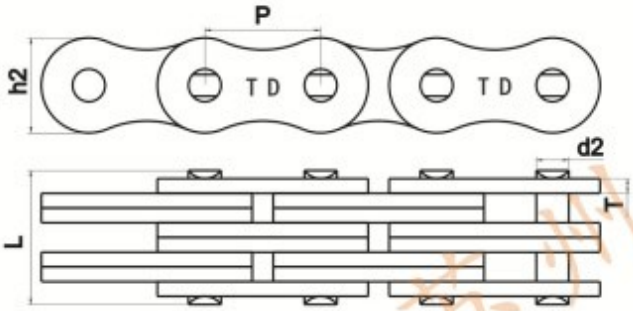

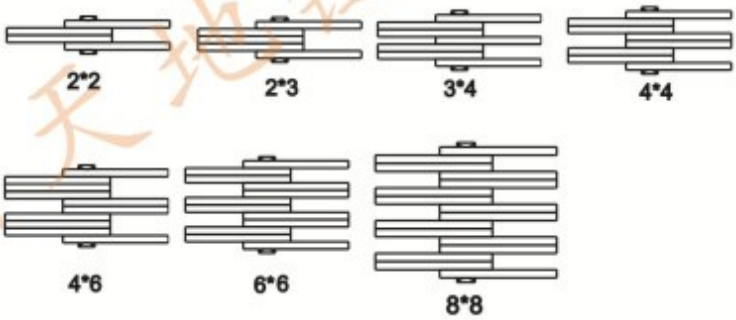

天地链号 Chain No.	节距 Pitch P mm	链板组合 Plate lacing	链板高度 Plate depth h2 min mm	链板厚度 Plate thickness T mm	销轴直径 Pin diameter d2 max mm	销轴长度 Pin length L max mm	极限抗拉强度 Ultimate tensile strength Q min kN/Ibf	平均抗拉强度 Average tensile strength Q0 kN	每米重量 Weight per meter q kg/m
FL966	9.525	6*6	8.65	1	3.28	14.2		31	0.66
AL322	9.525	2*2	7.7	1.3	3.58	6.8	9	10.2	0.23
AL344		4*4				11.6	18	20	0.46
AL422	12.7	2*2	10.4	1.5	3.96	8.3	14.7	15.4	0.39
AL444		4*4				14.4	29.4	30.8	0.74
AL466		6*6				20.5	44	46.2	1.13
AL522	15.875	2*2	12.8	2.03	5.08	11.05	24.5	25.2	0.64
AL534		3*4				17	36.8	37.8	1.1
AL544		4*4				19.4	48.9	50.5	1.25
AL566		6*6				27.5	73.4	74.2	1.79
AL622	19.05	2*2	15.6	2.42	5.94	13	33.4	37.5	0.86
AL644		4*4				22.7	66.7	75	1.76
AL666		6*6				32.2	100.1	112.5	2.6
AL688		8*8				42.2	133.4	142	3.49
AL822	25.4	2*2	20.8	3.25	7.92	16.2	57.9	65	1.54
AL844		4*4				29.4	115.7	130	3
AL866		6*6				44.2	173.5	195	4.46
AL888		8*8				55.5	231.4	245	6.3
AL1022	31.75	2*2	25.6	4	9.53	19.6	84.5	98	2.37
AL1044		4*4				36.4	169	196	4.68
AL1066		6*6				52.3	253.5	294	7.2
AL1088		8*8				68.5	338	371	9.94
AL1222	38.1	2*2	30.5	4.8	11.1	24.3	120.1	136	3.65
AL1244		4*4				43.8	240.2	272	7.05
AL1266		6*6				63.2	360.3	394	10.5
AL1288		8*8				82.6	480.4	512	14.03
AL1422	44.45	2*2	36.4	5.6	12.64	28.07	151.23	182	4.79
AL1444		4*4				51.3	302.5	356	10.34
AL1466		6*6				74.5	453.7	534	15.16
AL1622	50.8	2*2	41.6	6.4	14.21	33	191.26	231	5.98
AL1644		4*4				58	382.5	449.6	12.98
AL1666		6*6				83.8	573.8	674.4	19.76
AL1688		8*8				109.5	765	899.2	25.47

板式链（LL）
Leaf chains (LL)

天地链号	节距 Pitch	链板组合 Type	链板高度 Plate depth	链板厚度 Plate thickness	销轴直径 Pin diameter	销轴长度 Pin length	极限抗拉强度 Ultimate tensile strength	平均抗拉强度 Average tensile strength	每米重量 Weight per meter
Chain No.	P		h2 min	T	d2 max	L max	Q min	Q0	q
	mm		mm	mm	mm	mm	kN/Ibf	kN	kg/m
LL0822	12.7	2*2	10.6	1.6	4.45	8.9	18.2	20.4	0.42
LL0844		4*4				15.6	36.4	40.7	0.84
LL0866		6*6				22	54.6	60	1.24
LL0888		8*8				28.5	72.8	80	164
LL1022	15.875	2*2	13.7	1.6	5.08	9.2	22.7	25.5	0.54
LL1044		4*4				15.8	45.4	51	1.06
LL1066		6*6				22.1	68.1	76.3	1.57
LL1088		8*8				28.8	90.8	101.9	2.1
LL1222	19.05	2*2	16	1.85	5.72	10.4	29.5	33.2	0.73
LL1244		4*4				17.9	59	66.4	1.44
LL1266		6*6				25.4	88.5	99.7	2.15
LL1288		8*8				32.9	118	132.9	2.84
LL1622	25.4	2*2	21	3.1	8.28	17.2	58	66.7	1.52
LL1644		4*4				29.6	116	140	2.9
LL1666		6*6				42.4	174	208.8	4.3
LL1688		8*8				54.9	232	278	5.71
LL2022	31.75	2*2	26.4	3.5	10.19	20.1	95	109.2	2.33
LL2044		4*4				33.8	190	218.5	4.4
LL2066		6*6				50.1	285	324.6	6.79
LL2088		8*8				64	380	435.1	8.9
LL2422	38.1	2*2	33.4	5	14.63	28.4	170	195.5	4.47
LL2444		4*4				46.3	340	380.8	8.22
LL2466		6*6				66.4	510	571.2	12.22
LL2488		8*8				86.6	680	775.2	16.3
LL2822	44.45	2*2	37.08	6	15.9	32.2	200	224	5.1
LL2844		4*4				56.4	400	448	9.9
LL2866		6*6				80.8	600	672	14.6
LL2888		8*8				105.2	800	896	19.4
LL3222	50.8	2*2	42	6.4	17.81	34.8	260	291.2	6.2
LL3244		4*4				60.6	520	582.4	12.3
LL3266		6*6				86.4	780	873.6	18.3
LL3288		8*8				112.2	1040	1176	24
LL4022	63.5	2*2	52.76	8	22.89	42.2	360	403.2	10.3
LL4044		4*4				74.4	780	873.6	20
LL4066		6*6				106.5	1080	1209.6	30
LL4088		8*8				140	1440	1747.2	39.1
LL4822	76.2	2*2	63.88	10	29.24	54.6	560	627.2	18.5
LL4844		4*4				92.6	1120	1554.4	35.7
LL4866		6*6				133.4	1680	1880	53
LL4888		8*8				174.2	2240	2508.8	70.4

板式链（LH或BL）
Leaf chains (LH or BL)

天地链号		节距 Pitch	链板组合 Type	链板高度 Plate depth	链板厚度 Plate thickness	销轴直径 Pin diameter	销轴长度 Pin length	极限抗拉强度 Ultimate tensile strength	平均抗拉强度 Average tensile strength	每米重量 Weight per meter
Chain No.		P		h2 min	T	d2 max	L max	Q min	Q0	q
		mm		mm	mm	mm	mm	kN/Ibf	kN	kg/m
LH0822	BL422		2*2				11.05	22.2	27.6	0.64
LH0823	BL423		2*3				13.16	22.2	27.6	0.8
LH0834	BL434		3*4				17.4	33.4	41.4	1.12
LH0844	BL444	12.7	4*4	12.07	2.08	5.09	19.51	44.5	56	1.28
LH0846	BL446		4*6				23.75	44.5	56	1.6
LH0866	BL466		6*6				27.99	66.7	81.7	1.92
LH0888	BL488		8*8				36.45	89	109.4	2.56
LH1022	BL522		2*2				12.9	33.4	42.8	0.88
LH1023	BL523		2*3				15.37	33.4	42.8	1.1
LH1034	BL534		3*4				20.32	48.9	63.6	1.5
LH1044	BL544	15.875	4*4	15.09	2.44	5.96	22.78	66.7	84.5	1.8
LH1046	BL546		4*6				27.74	66.7	84.5	2.2
LH1066	BL566		6*6				32.69	100.1	125.1	2.65
LH1088	BL588		8*8				42.57	133.4	169.5	3.5
LH1222	BL622		2*2				17.37	48.9	63.6	1.45
LH1223	BL623		2*3				20.73	48.9	63.6	1.8
LH1234	BL634		3*4				27.43	75.6	102.6	2.5
LH1244	BL644	19.05	4*4	18.11	3.3	7.94	30.78	97.9	122.3	2.9
LH1246	BL646		4*6				37.49	97.9	122.3	3.6
LH1266	BL666		6*6				44.2	146.8	190.8	4.3
LH1288	BL688		8*8				57.61	195.7	238.8	5.8
LH1622	BL822		2*2				21.34	84.5	108.2	2.2
LH1623	BL823		2*3				25.48	84.5	108.2	2.7
LH1634	BL834		3*4				33.76	129	143.6	3.8
LH1644	BL844	25.4	4*4	24.13	4.09	9.54	37.9	169	214.6	4.3
LH1646	BL846		4*6				46.18	169	214.6	5.4
LH1666	BL866		6*6				54.46	253.6	324.6	6.5
LH1688	BL888		8*8				71.02	338.1	432.7	8.6
LH2022	BL1022		2*2				25.37	115.6	146.8	3.4
LH2023	BL1023		2*3				30.33	115.6	146.8	4.3
LH2034	BL1034		3*4				40.23	182.4	231.6	6
LH2044	BL1044	31.75	4*4	30.18	4.9	11.11	45.19	231.3	291.4	6.9
LH2046	BL1046		4*6				55.09	231.3	291.4	8.6
LH2066	BL1066		6*6				65	347	430.3	10.3
LH2088	BL1088		8*8				84.81	462.6	555.1	13.8

板式链（LH或BL）
Leaf chains (LH or BL)

天地链号		节距 Pitch	链板组合 Type	链板高度 Plate depth	链板厚度 Plate thickness	销轴直径 Pin diameter	销轴长度 Pin length	极限抗拉强度 Ultimate tensile strength	平均抗拉强度 Average tensile strength	每米重量 Weight per meter
Chain No.		P		h2 min	T	d2 max	L max	Q min	Q0	q
		mm		mm	mm	mm	mm	kN/Ibf	kN	kg/m
LH2422	BL1222		2*2				29.62	151.2	192	4.6
LH2423	BL1223		2*3				35.43	151.2	192	5.8
LH2434	BL1234		3*4				47.07	244.6	308.1	8.1
LH2444	BL1244	38.1	4*4	36.2	5.77	12.71	52.88	302.5	381.1	9.3
LH2446	BL1246		4*6				64.52	302.5	381.1	11.6
LH2466	BL1266		6*6				76.15	453.7	543.6	13.9
LH2488	BL1288		8*8				99.42	605	726	18.6
LH2822	BL1422		2*2				33.55	191.3	225.7	6.1
LH2823	BL1423		2*3				40.16	191.3	225.7	7.6
LH2834	BL1434		3*4				53.37	315.8	372.6	10.6
LH2844	BL1444	44.45	4*4	42.24	6.55	14.29	59.97	382.6	451.2	12.2
LH2846	BL1446		4*6				73.18	382.6	451.2	15.2
LH2866	BL1466		6*6				86.39	578.3	682.4	18.2
LH2888	BL1488		8*8				112.8	765.1	902.8	24.3
LH3222	BL1622		2*2				39.01	289.1	341.1	8
LH3223	BL1623		2*3				46.58	289.1	341.1	10
LH3234	BL1634		3*4				61.72	440.4	519.6	14
LH3244	BL1644	50.8	4*4	48.26	7.52	17.46	69.29	578.3	680.4	16
LH3246	BL1646		4*6				84.43	578.3	684.4	20
LH3266	BL1666		6*6				99.57	857.4	1000.7	24
LH3288	BL1688		8*8				129.84	1156.5	1364.6	32
LH4022	BL2022		2*2				51.74	433.7	511.7	15.8
LH4023	BL2023		2*3				61.7	433.7	511.7	19.8
LH4034	BL2034		3*4				81.61	649.4	766.2	27.7
LH4044	BL2044	63.5	4*4	60.33	9.91	23.81	91.57	867.4	1023.5	31.6
LH4046	BL2046		4*6				111.48	867.4	1023.5	39.5
LH4066	BL2066		6*6				131.39	1301.1	1535.2	47.4
LH4088	BL2088		8*8				171.22	1734.8	2046.5	63.2

管子钳链
Pipe clamp chain

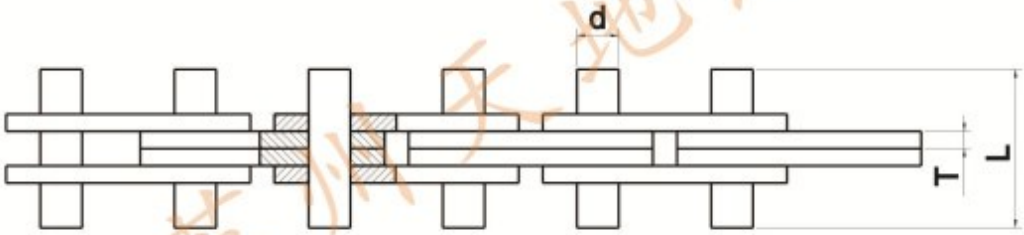

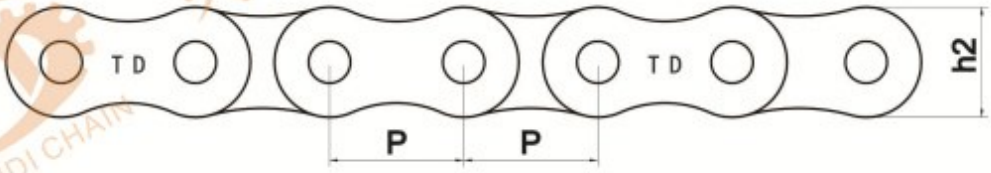

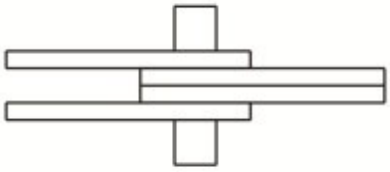

2*2

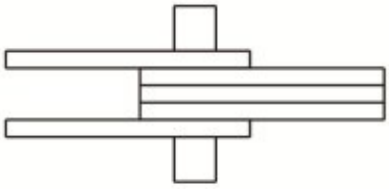

2*3

天地链号	节距 Pitch	链板组合 Type	链板高度 Plate depth	链板厚度 Plate thickness	销轴直径 Pin diameter	销轴长度 Pin length	抗拉强度 Average tensile strength	每米重量 Weight per meter
Chain No.	P		h2 max	T	d max	L	Q	q
	mm		mm	mm	mm	mm	kN	kg/m
AL522A	15.875	2*2	13.03	2.06	5.08	20.5	24.50	0.77
AL522B						17.2	24.50	0.7
AL522WR-16						16.0	21.80	0.72
AL522WR-11.02/20.5						20.5	21.80	0.73
AL622A	19.050	2*2	15.62	3.26	5.94	23.3	44.10	1.07
AL622B				2.44	5.94		33.35	0.88
AL822A	25.400	2*2	20.83	3.26	7.92	30.0	55.60	1.73
BL622A	19.050	2*2	18.11	3.26	7.92	29.0	48.90	1.81
BL822A	25.400	2*2	24.13	内链板：3.70 外链板：4.09	9.54	36.0	169.00	2.82
BL823A		2*3		4.09		34.0	98.00	3.4
LL1022A	15.875	2*2	13.72	1.70	5.08	14.0	22.20	0.64

侧弯链
Side bow chains

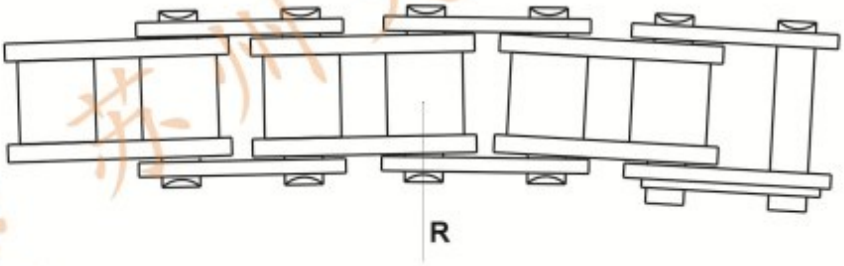

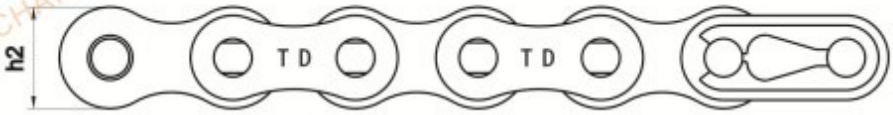

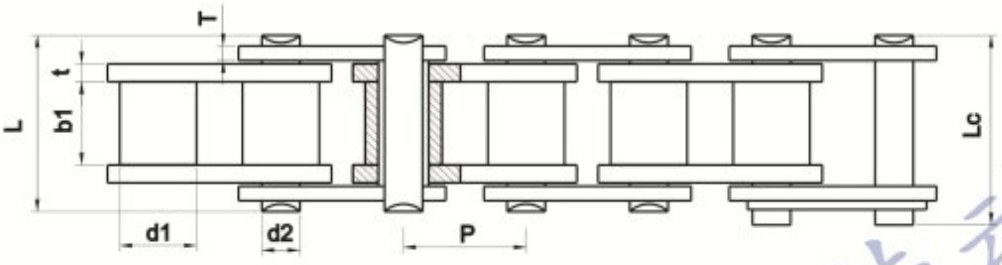

天地链号	节距 Pitch	滚柱直径 Roller diameter	内节内宽 Width between inner plates	销轴直径 Pin diameter	销轴长度 Pin length		内片宽度 Plate depth	链板厚度 Plate thickness	侧弯半径 Bending radius	极限抗拉强度 Ultimate tensile strength	平均抗拉强度 Average tensile strength	每米重量 Weight per meter
Chain No.	P	d1 max	b1 min	d2 max	L max	Lc max	h2 max	t/T max	R	Q min	Q0	q
	mm	mm	mm	mm	mm	mm	mm	mm	mm	kN/Ibf	kN	kg/m
40SB	12.7	7.95	7.85	3.96	16.9	18.1	11.7	1.5	350	13.8/3136	15.2	0.8
43SB	12.7	7.95	7.85	3.55	18.3	19.5	11.7	1.5	305	12/2727	13.2	0.64
50SB	15.875	10.16	9.4	4.45	20.7	22.7	15.09	2	400	20.6/4681	22.7	1.09
60SB	19.05	11.91	12.57	5.08	26.6	28.4	18.1	2.4	500	15.7/3568	17.3	1.42
63SB	19.05	11.91	12.68	5.08	28.8	30.6	17.2	2.4/2.0	350	12.5/2840	20	1.4
80SB	25.4	15.88	15.75	7.19	34	37.3	24	3.2	711	40.9/9201	42	2.6
06BSB	9.525	6.35	5.72	3.05	13.5	15	8.2	1.3	300	8/1818	8.8	0.6
08BSB	12.7	8.51	7.75	3.96	17.4	18.7	11.8	1.6	400	14/3182	15.4	0.7
08BSBF1	12.7	8.51	7.75	3.96	16.3	17.6	11.8	1.6/1.2	400	12.8/2909	14.1	0.65
10BSB	15.875	10.16	9.65	4.45	20.1	21.5	14.7	1.7	400	15.6/3545	17.2	0.93
12BSB	19.05	12.07	11.68	5.08	23.1	24.8	16	1.85	500	20.5/4658	22.6	1.16
16BSB	25.4	15.88	17.22	7.94	36.5	39.7	21	3.7/3.0	500	55.6/12635	64	2.53
C2050SB	31.75	10.16	9.4	5.08	21.3	22.6	15	2.03	800	21.8/4954	24.1	0.84
C2060SB	38.1	11.91	12.57	5.08	26.8	28.8	18	2.42	800	21.8/4954	24	1.17

转弯机链（侧弯链附件）
Turning machine chain (side bow chains attachments)

50SBF1

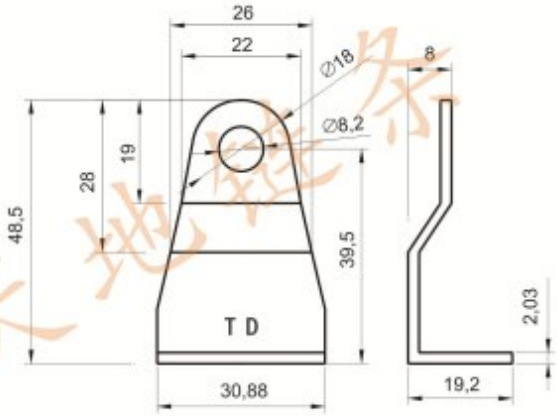

50SBF2

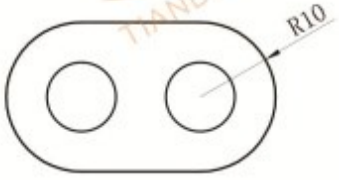

50SBF3

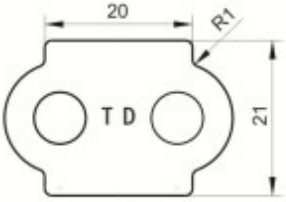

63SBF2

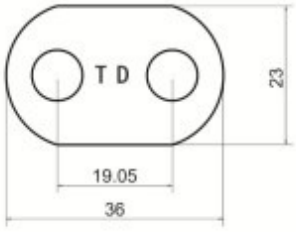

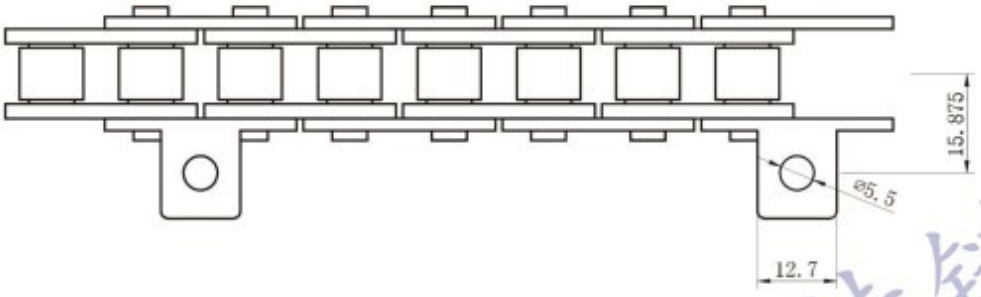

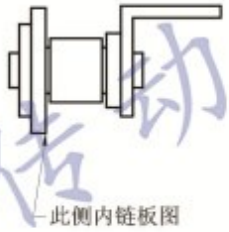

63SBF1

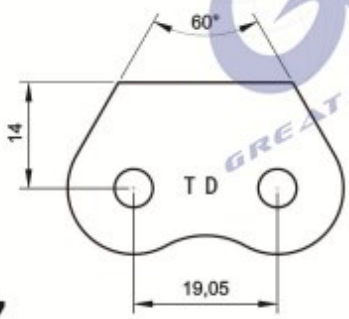

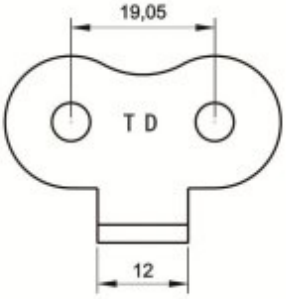

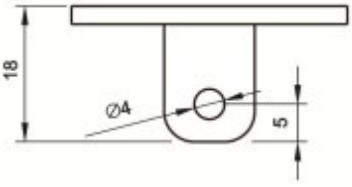

转弯机链（蝴蝶链）
Turning machine chain

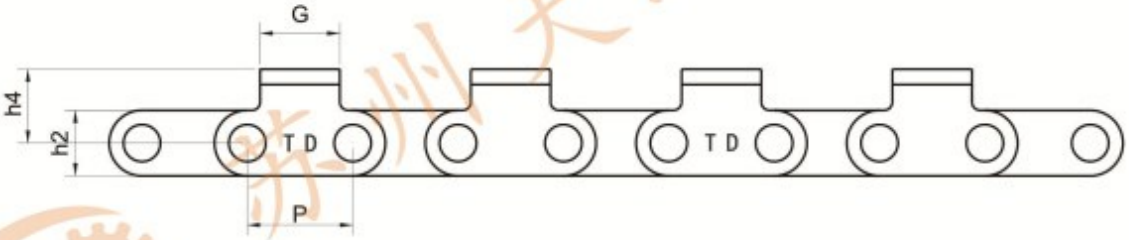

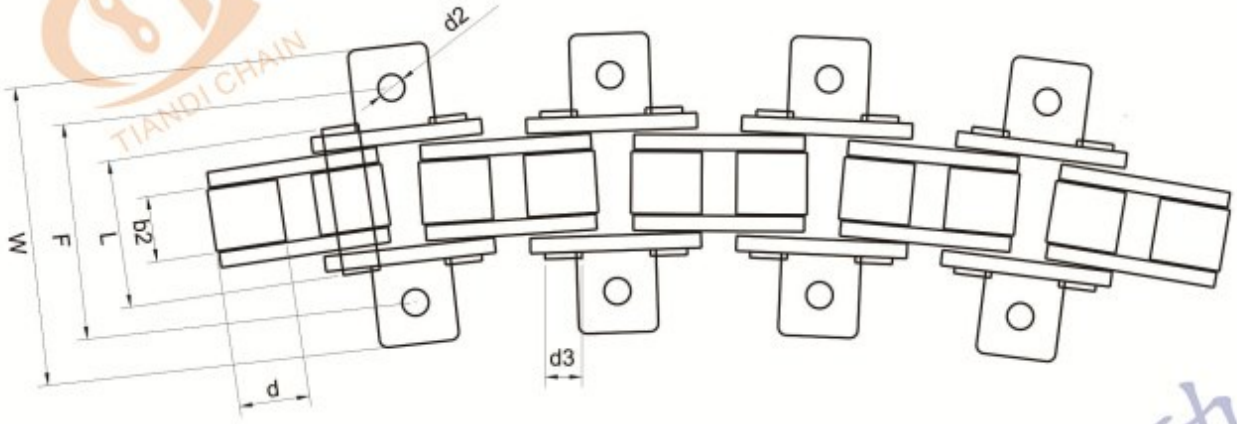

A Type
straight side plate

B Type
8 type plate

天地链号	节距 Pitch	滚柱直径 Roller diameter	内节内宽 Width between inner plates	销轴直径 Pin diameter	销轴长度 Pin length		内片宽度 Plate depth	附板尺寸 Attachment size				孔直径 hole diameter	链板厚度 Plate thickness	形式 Type
Chain No.	P	d max	b2 min	d3 max	L max	Lc max	h2 max	F	W	G	h4	d2	T max	
	mm	mm	mm	mm	mm	mm	mm	mm	mm	mm	mm	mm	mm	
08BSB-F1	12.7	8.51	7.95	4.45	17.8	18.8	11.7	26	36	9.5	8.6	3.2	1.85	A
08BSB-F2	12.7	8.51	7.95	4.45	17.8	18.8	11.7	26	36	9.5	8.6	3.2	1.85	B
50SB-F4	15.875	10.16	7.95	4.45	20	21	15.09	30	39	12	9	3.2	2.4	A
50SB-F5	15.875	10.16	7.95	4.45	20	21	18.1	30	39	12	9	3.2	2.4	B

电阻链
Resistor chains

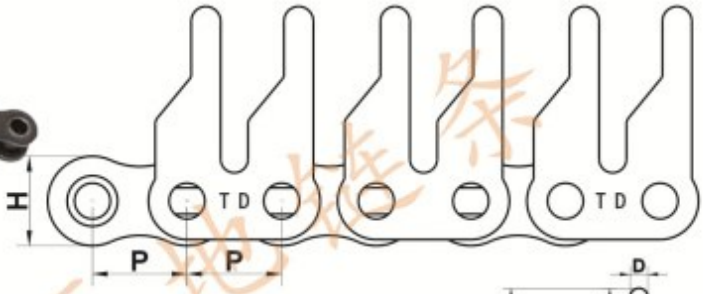

T型 T type

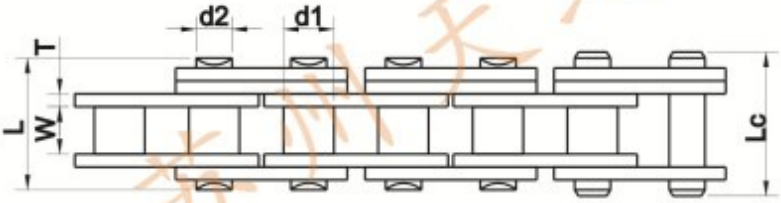

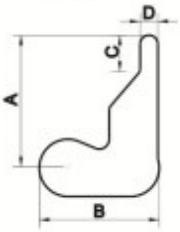

Tp型 Tp type

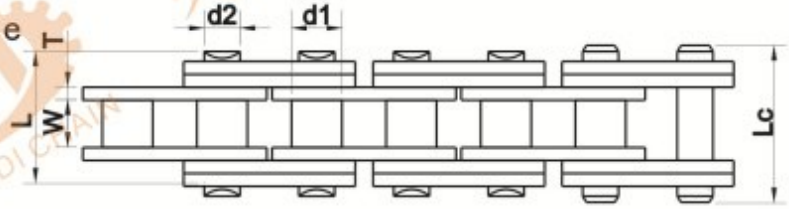

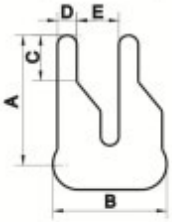

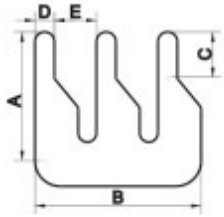

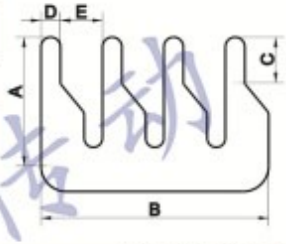

凿片	A	B	C	D	E
1T	19.6	17.92	6.45	2.65	-
2T	19.6	17.15	6.45	2.05	7.55
3T（23.6）	18.9	17.50	7.80	2.00	3.80
3T-F2（19.8）	15.1	16.95	5.90	2.00	4.80
3T-F3（19.8）	16.1	17.50	3.30	2.20	4.10
4T	15.2	17.50	6.00	1.60	3.70

天地链号	节距 Pitch	内节宽度 Width between inner plates	滚柱直径 Roller diameter	销轴外径 Pin diameter	销轴长度 Pin length		链板高度 Plate depth	链板厚度 Plate thickness	抗拉载荷 Tensile strength	平均抗拉载荷 Average tensile strength
Chain No.	P	W	d1	d2	L	Lc	H	T	min	
	mm	mm	mm	mm	mm	mm	mm	mm	kgf	kgf
35-T	9.525	4.77	5.08	3.60	13.1	14.5	9.00	1.30	800	1150
35-tp	9.525	4.77	5.08	3.60	14.5	15.8	9.00	1.30	800	1150

35-1T F1

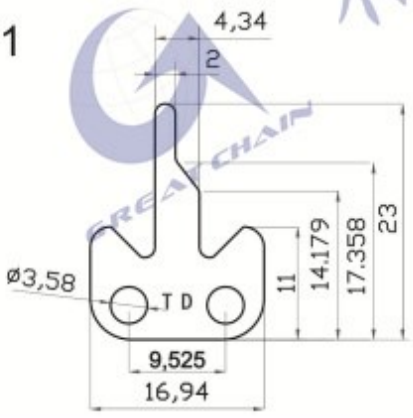

35-1T F2

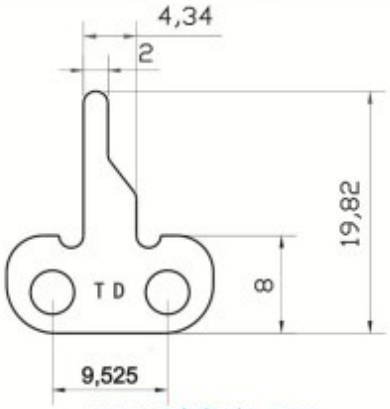

尖齿链
Sharp top chains

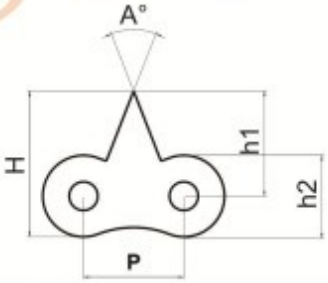

天地链号 Chain No.	P	h1	h2	H	A	T
	mm	mm	mm	mm		mm
04C	6.35	10.5	5	13	30	0.8
08A	12.7	16.6	10	21.5	30	1.5
08A-F4	12.7	18.2	10.6	23.5	30	1.5
08A-F5	12.7	15	10.6	20.3	34	1.5
08BF1	12.7	14.3	10.6	19.6	30	1.5
08BF2	12.7	16	10.3	21.2	30	1.5
08BF3	12.7	15	10.8	20.4	45	1.5
08BF17	12.7	16.65	10.5	21.9	25	1.5
C08B	12.7	15.5	11	21	20	1.5
C08BF1	12.7	16	10.3	21	20	1.5
C08B-F3	12.7	19.1	10.8	24.5	30	1.5
10A	15.875	17	13	23.15	20	2.03
10A-F4	15.875	25	13	31.5	45	2.03
10A-F5	15.875	21.15	13	27.65	28	2.03
10A-F6	15.875	14.65	13	21.15	28	2.03
12A	19.05	19.8	15.5	27.5	30	2.42
16A-F4	25.4	38	21	48.5	50	3
P30	30	60	23.6	71.8	44	3

08A-F3

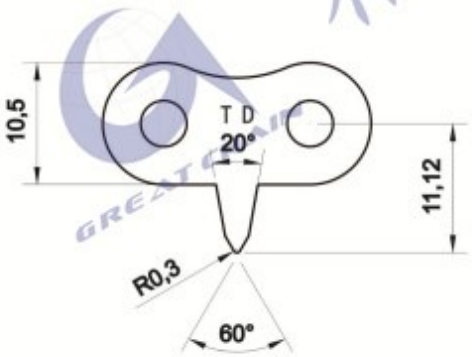

C08B-F2

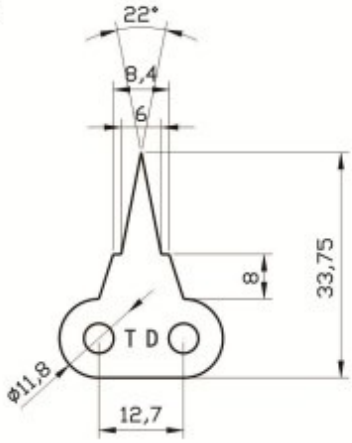

尖齿链（V型）
Sharp top chains (V type)

V型链片可以单侧和双侧
V type plate can be unilateral and bilateral

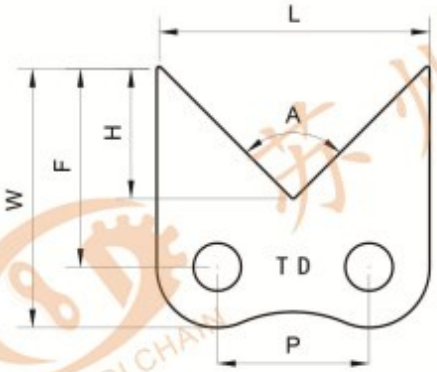

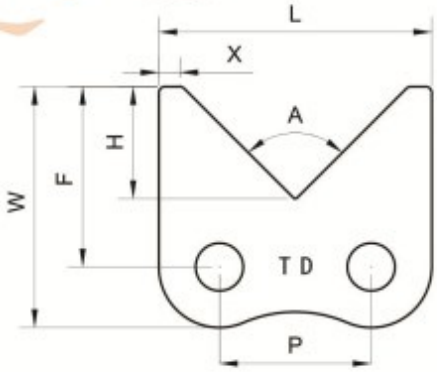

天地链号 Chain No.	P	H	F	W	L	A	X	T
	mm	mm	mm	mm	mm	mm	mm	mm
06B-F4	9.525	5.3	20.3	24.4	17.7	110	-	1.3
06B-F5	9.525	6.5	14.5	18.5	17.5	90	-	1.3
08A-F1	12.7	9.3	15	20	22.7	90	2	1.5
08A-F2	12.7	6	12.1	17.1	22.7	120	-	1.5
08A-F7	12.7	8	20	25	22	85	3.5	1.5
08B-F4	12.7	10	18.9	24.75	24.4	90	-	1.5
08B-F12	12.7	12.5	22.35	28	24	60	3	1.5
083	12.7	10.7	14.3	20.3	24.7	90	-	1.3
083-F2	12.7	10	14.8	19	25	100	-	1.3
10A-F7	15.875	9.4	29.5	37	30.8	112	-	2
10A-F8	15.875	11.8	16.8	23.8	30	90	-	2
10A-F9	15.875	9.2	20	26.4	23.9	101	-	2
12A-F1	19.05	14.5	28	35.8	34.6	90	-	2.4
16A-F3	25.4	16.7	42.7	55	50	108	2	3

08B-F5

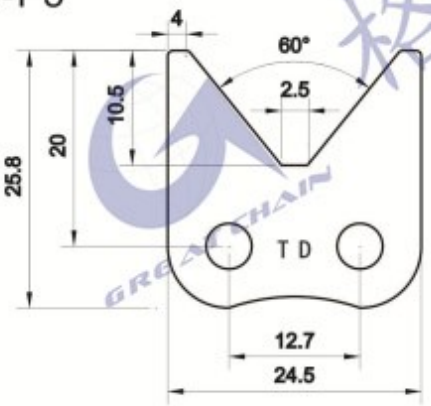

06B-F3

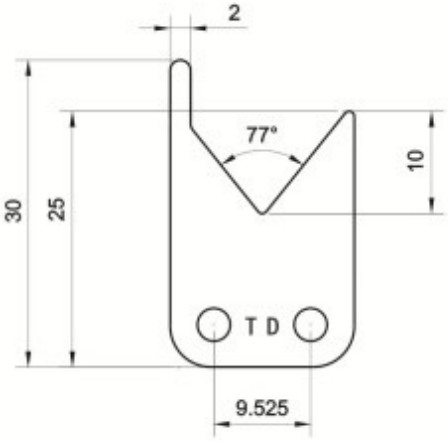

08B-F6

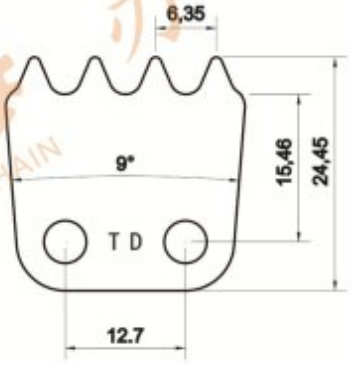

08B-F7

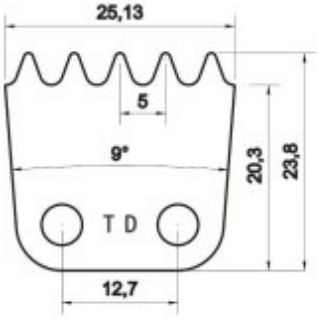

08B-F8

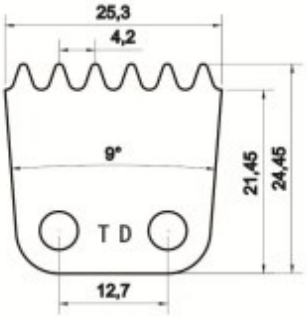

08B-F9

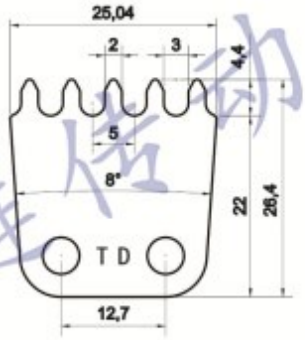

08B-F13

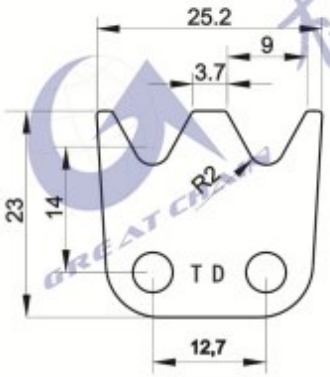

08B-F15

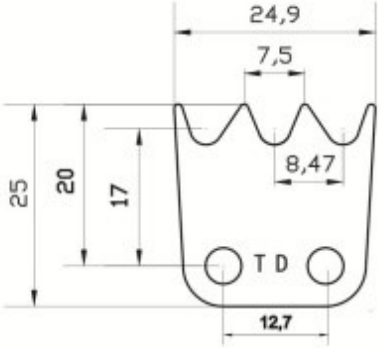

尖齿链（多齿、棉签链条）
Sharp top chains(Cotton swab chains)

A type 加厚铣扁

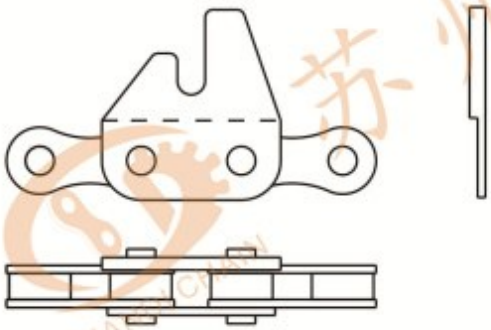

B type 正常片

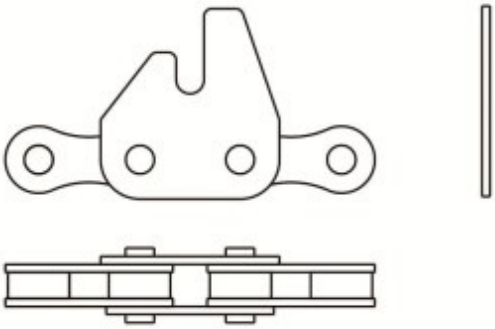

MQ-F1 -081 085

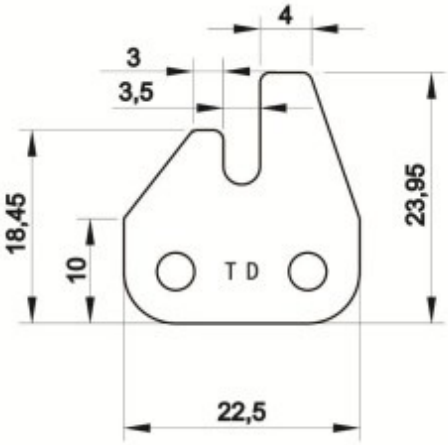

MQ-F2 -083

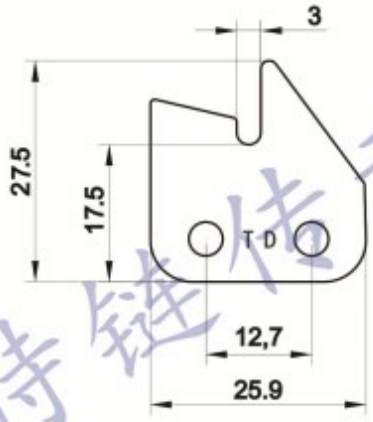

MQ-F3 -083

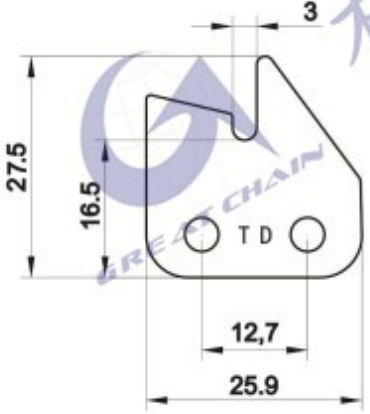

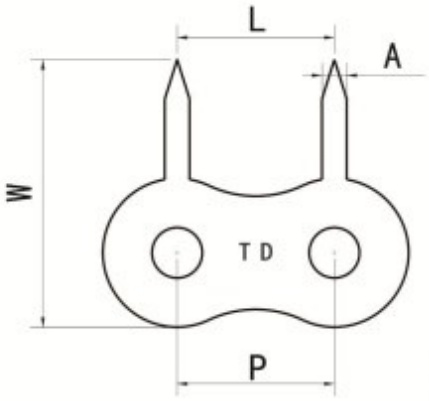

天地链号 Chain No.	P	W	A	L
	mm	mm	°	mm
10A-F1	15.875	27	2.5	15.875
06B-F6	9.525	17	2	9.525

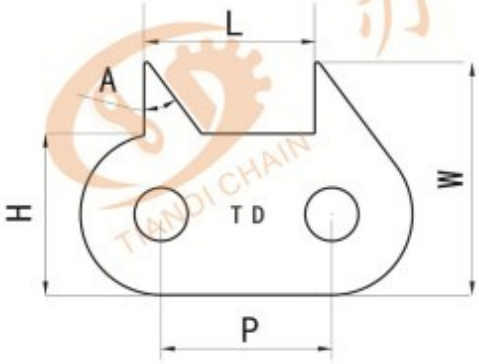

天地链号 Chain No.	P	W	H	A	L
	mm	mm	mm	°	mm
04C-F3	6.35	8.2	5	50	6.35
12A-F2	19.05	21.7	18	37	19.05
12A-F4	19.05	26.5	18	37	19.05
16B-F1	25.4	27.5	21	57	25.4

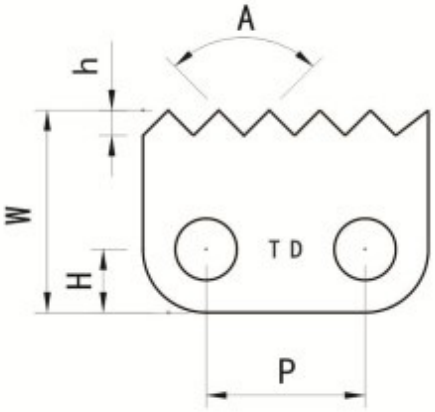

天地链号 Chain No.	P	W	H	A	h
	mm	mm	mm	°	mm
04C-F1	6.35	8	2.5	90	1
16A-F1	25.4	32	10.5	85	5
16B-F2	25.4	26.5	10	90	3.5

04C-F1

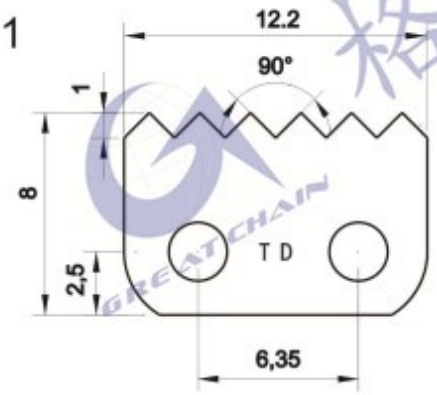

04C-F2

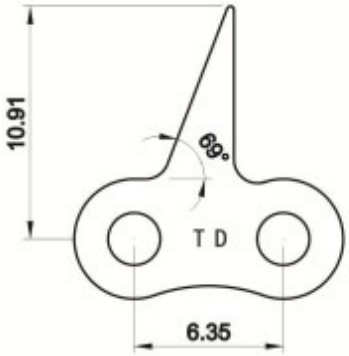

尖齿链
Sharp top chains

06B-F2

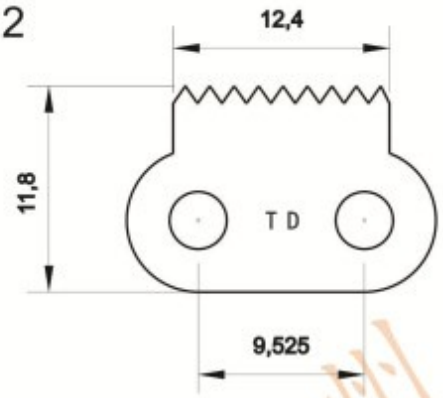

06B-F1 防滑链

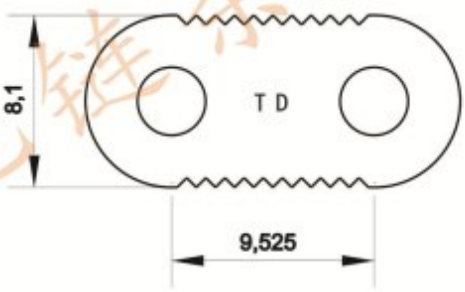

08A-F6

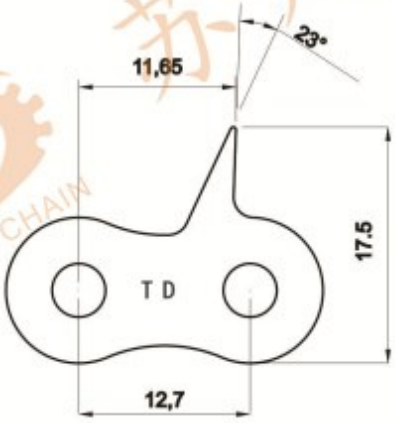

08B-F11

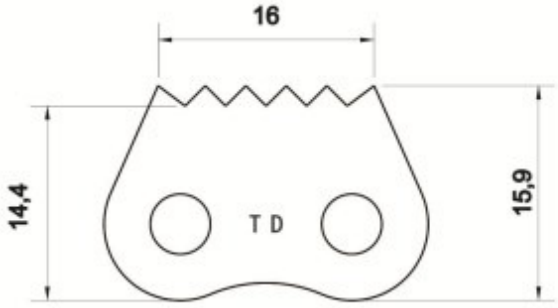

08B-F10

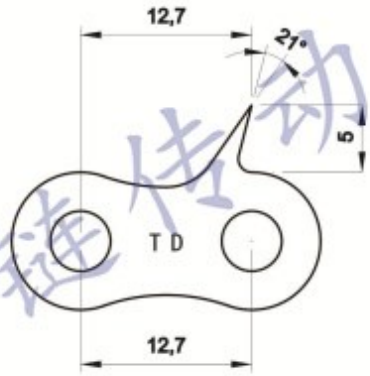

08B-F14

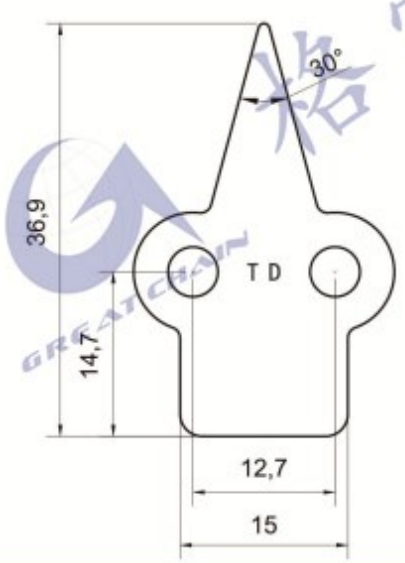

08B-F16

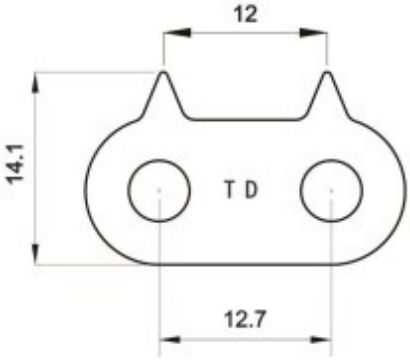

10A-F2

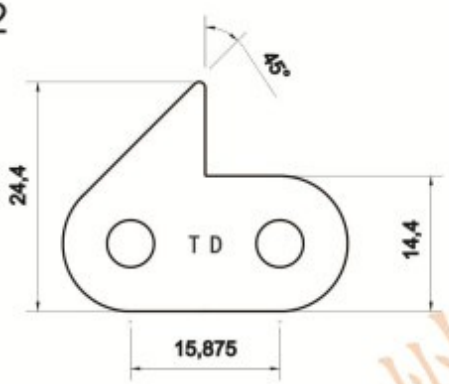

10A-F3

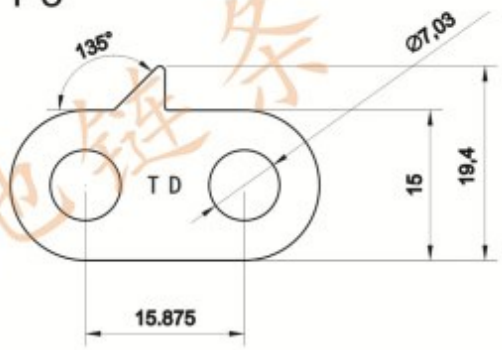

10A-F10

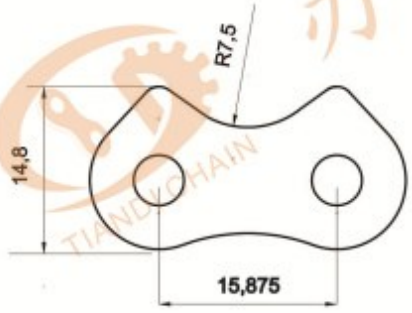

12A-F3

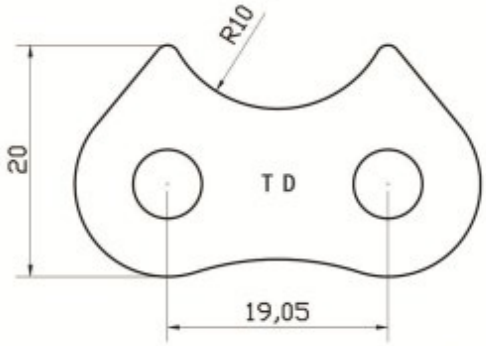

12A-F5

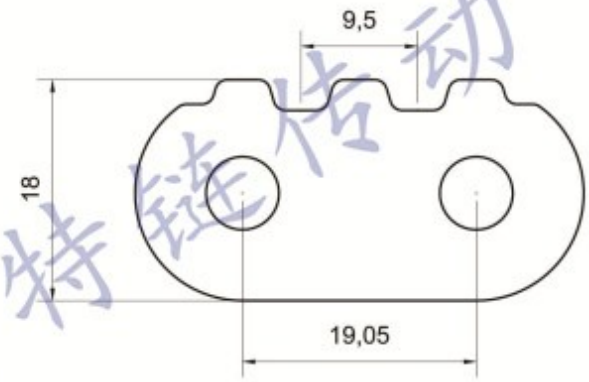

12B-F1

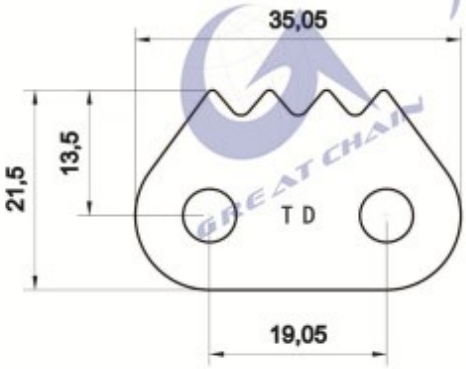

16A-F2

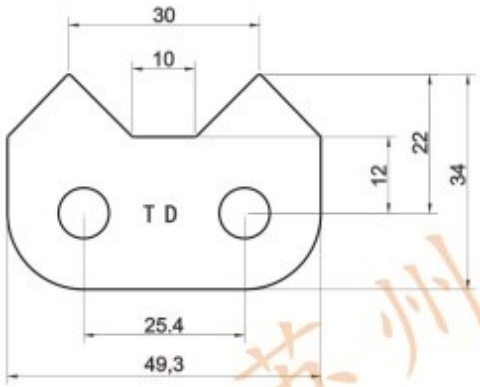

16B-F3

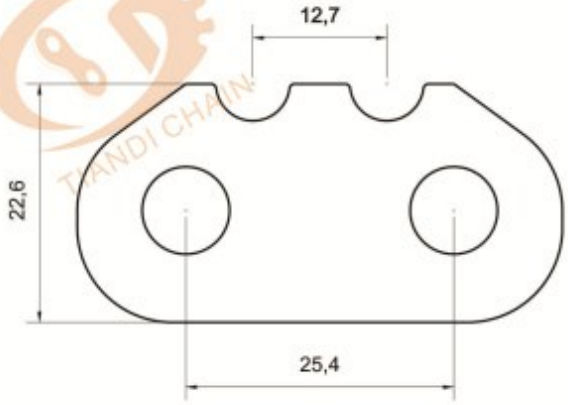

16B-F4

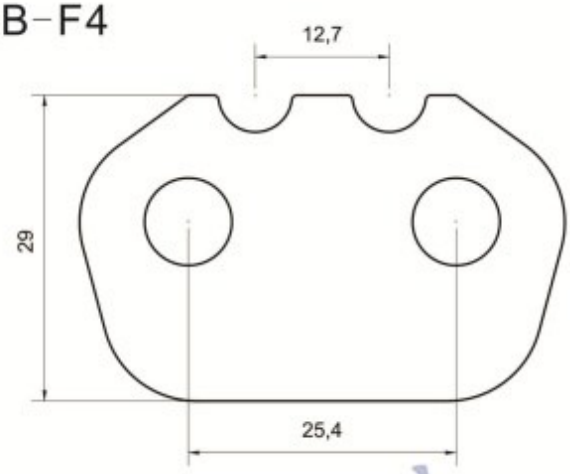

24B-F1

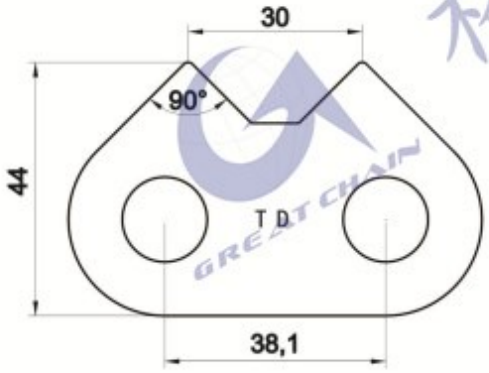

2040

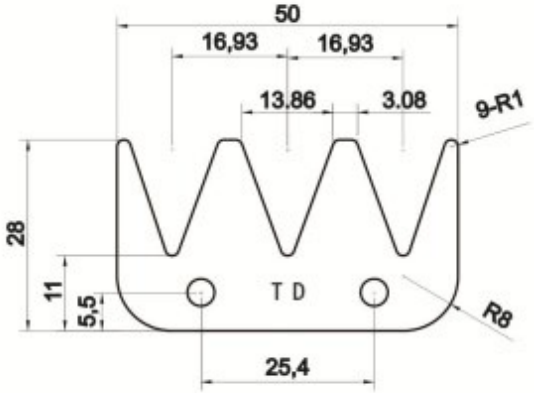

尼龙塑料链
Plastic chains

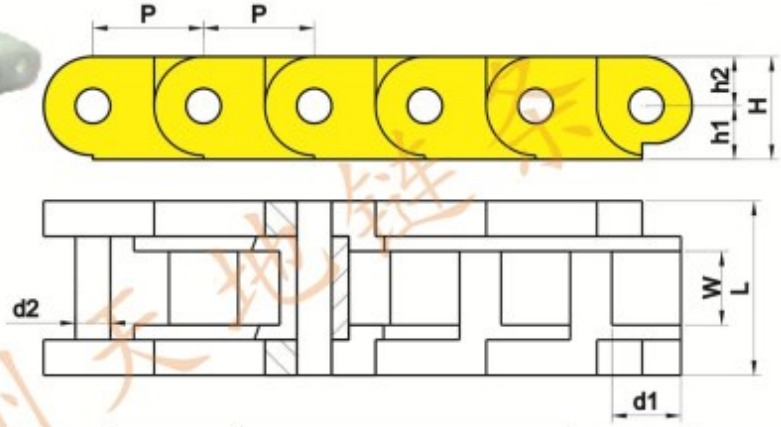

天地链号	节距 Pitch	滚柱直径 Roller diameter	内节内宽 Width between inner	销轴直径 Pin diameter	销轴长度 Pin length	尼龙宽度 Plastic width			工作载荷 Max allowed load
Chain No.	P	d1 max	W min	d2	L	H	H1	H2	max
	mm	mm	mm	mm	mm	mm	mm	mm	
40P	12.7	7.95	7.95	4	20	12.7	6	6.7	45
40P-2	12.7	7.95	7.95	4	32.4	12.7	6	6.7	90
50P	15.875	10.16	9.4	5	25	15	7.2	7.8	65
60P	19.05	11.91	12.7	6	30	17.3	8.5	8.8	90

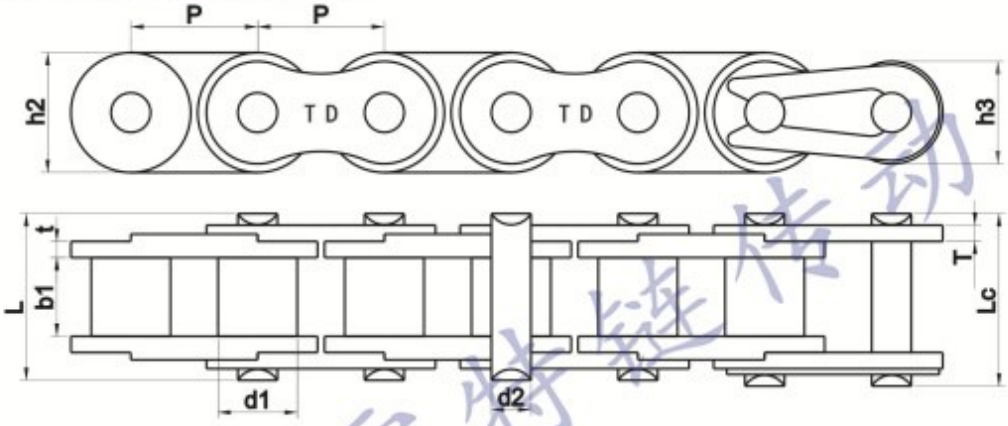

天地链号	节距 Pitch	滚柱直径 Roller diameter	内节内宽 Width between inner plates	销轴直径 Pin diameter	销轴长度 Pin length		链板高度 Inner plate depth		片子厚度 Plate thickness	抗拉强度 Ultimate tensile strength
Chain No.	P	d1 max	b1 min	d2 max	L max	Lc max	h2 max	h3 max	t/T	Q min
	mm	mm	mm	mm	mm	mm	mm	mm	mm	kN/LB
04CSPa	6.35	3.3	3.1	2.31	7.9	8.4	6	5.06	0.8	0.6/136
06CSPa	9.525	5.08	4.68	3.58	12.4	13.2	9	7.8	1.3	1.1/250
08ASPa	12.7	7.92	7.85	3.96	16.6	17.8	12	10.4	1.5	2.5/568
10ASPa	15.875	10.16	9.4	5.08	20.7	22.2	15.1	13	2.03	3.5/795
12ASPa	19.05	11.91	12.57	5.94	25.9	27.7	18	15.6	2.42	4.5/1023
16ASPa	25.4	15.88	15.75	7.92	32.7	35	24	20.5	3.25	7.5/1023
05BSPa	8	5	3	2.31	8.2	8.9	7.1	6.6	0.8	0.7/157
08BSPa	12.7	8.51	7.75	4.45	16.7	18.2	11.8	10.6	1.6	2.5/568
10BSPa	15.875	10.16	9.65	5.08	19.5	20.9	14.7	13.7	1.7	3.5/795
12BSPa	19.05	12.07	11.68	5.72	22.5	24.2	16	15	1.85	4.2/1023
16BSPa	25.4	15.88	17.02	8.28	36.1	37.4	21	21	4.15/3.1	7.5/1023

拖板链
Articulated bottomplate chains

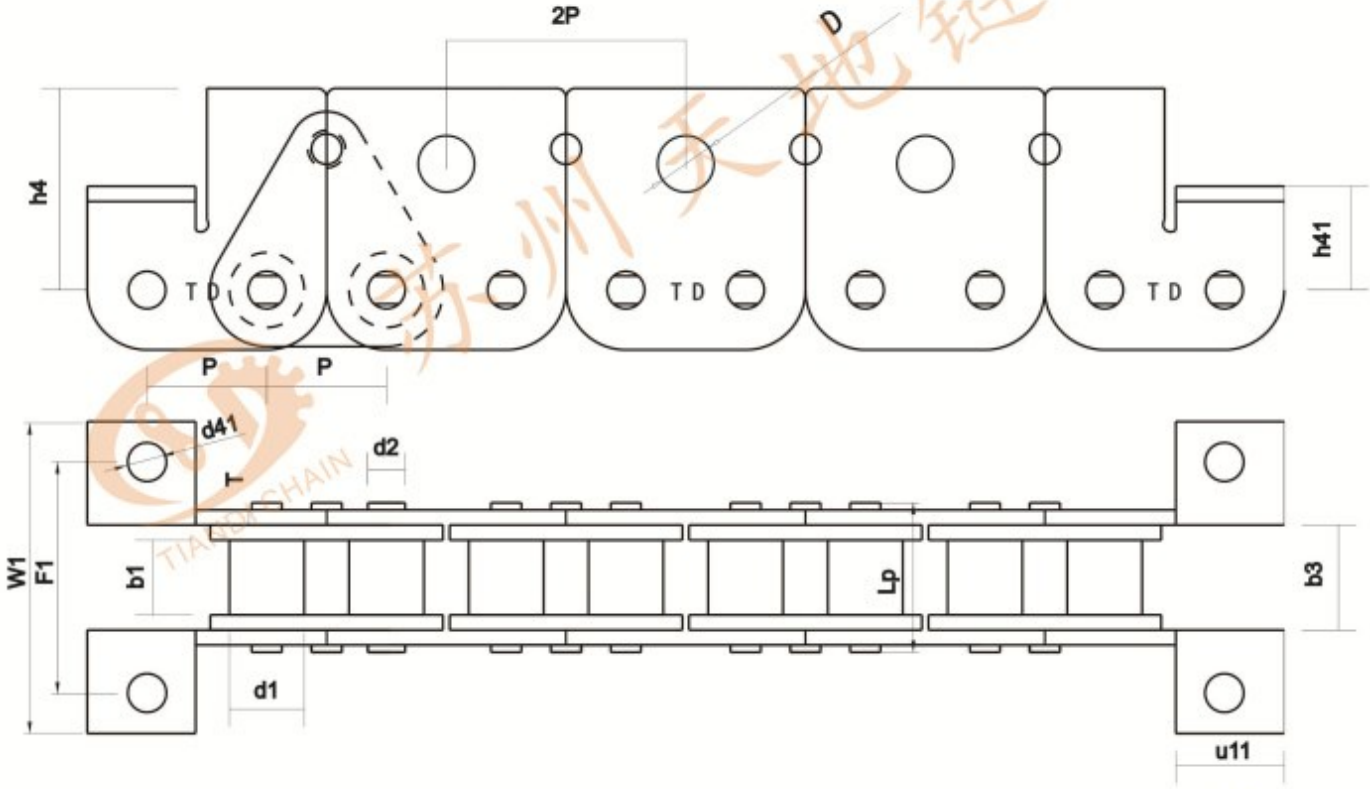

天地链号	节距 Pitch	滚子直径 Roller diameter	内节内宽 Width between inner plates	销轴尺寸 Pin size		链板厚度 Plate thickness	托板尺寸 Plate size		接头尺寸 CL size					
型号	P	b1	d1	d2	Lp	T	h4	D	b3	h41	u11	f1	d41	W1
16A-F1-TB48	25.4	15.75	15.88	7.92	32.7	3.2	39	12	22.15	22	23	49	8.2	66.18
16B-F1-TB32	25.4	17.02	15.88	8.28	36.1	4	26	2-4.4	25.02	15	23	50.8	6.2	67.6

拖板链
Articulated bottomplate chains

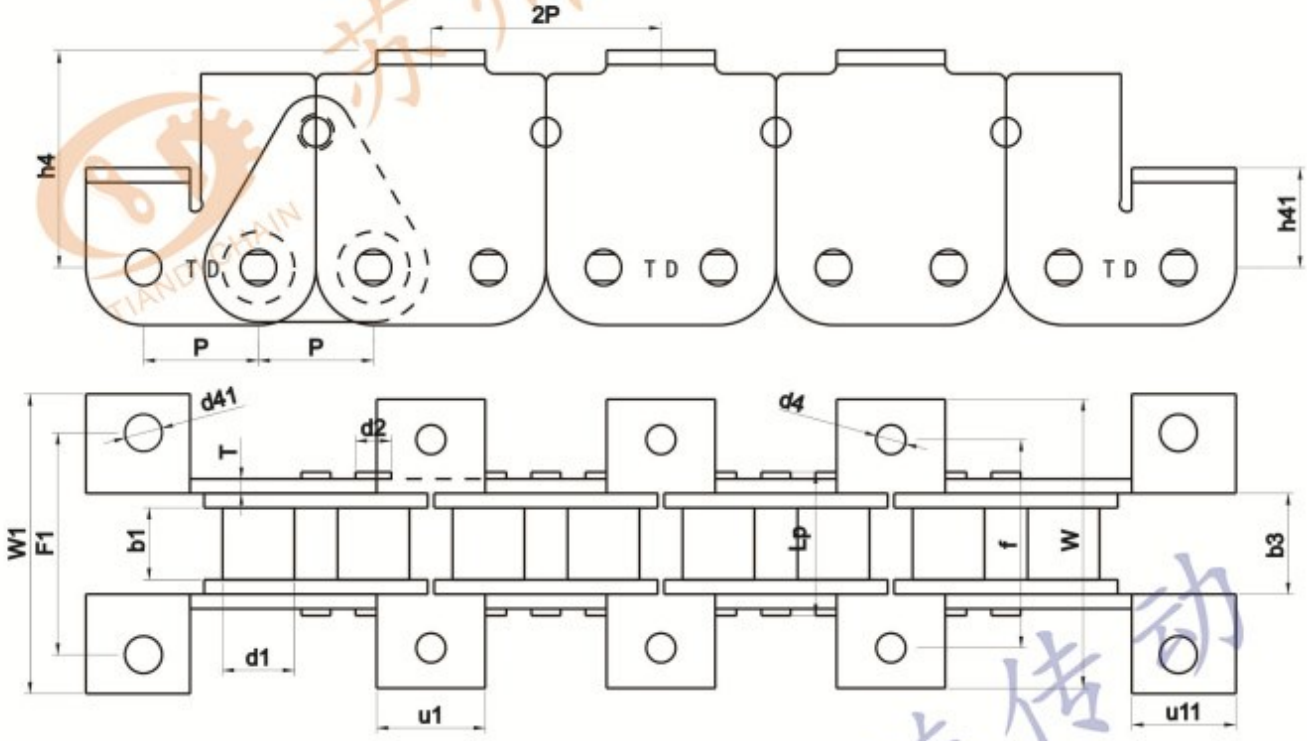

天地链号	节距 Pitch	滚子直径 Roller diameter	内节内宽 Width between inner plates	销轴尺寸 Pin size		链板厚度 Plate thickness	托板尺寸 Plate size					接头尺寸 CL size					
型号	P	b1	d1	d2	Lp	T	h4	u1	f	d4	W	b3	h41	u11	f1	d41	W1
12A-TB24	19.05	11.91	12.57	5.94	26.9	2.4	24	30	42	5.5	58	17.37	14	18	40	6.2	54
P23-TB45	23	15.75	15.88	7.92	31.9	3	45	23	45.5	6.2	63.5	21.75	22	21	49	8.2	66.18
16A-TB48	25.4	15.75	15.88	7.92	32.7	3.2	48	24	46	6.5	63.2	22.15	22	23	49	8.2	66.18
16B-TB32	25.4	17.02	15.88	8.28	36.1	4	32	22	50.8	6.2	67.6	25.02	15	23	50.8	6.2	67.6
20A-TB45	31.75	18.9	19.05	9.53	41.1	4	45	30	67	10	91	26.9	21	30	71	11	95
20A-TB51	31.75	18.9	19.05	9.53	39	4	51	30	67	10	91	27.51	27	30	71	11	95
24A-TB65	38.1	25.5	22.23	11.11	49	4.8	65	45	75	9	100	35.1	32	30	75	11	100

无极变速链
Self-tooth-forming chains

P.I.V无极变速链
PIV infinitely variable speed chains

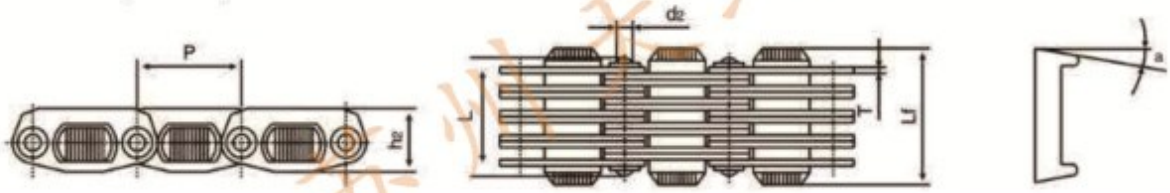

天地链号	节距 Pitch	销轴直径 Pin diameter	销轴长度 Pin length	链板高度 Plate depth	滑片长度 Width over friction plate	滑片斜角 Angle of friction plate	极限拉伸载荷 Ultimate tensile strength	每米重量 Weight per meter
	P	d2	L	h2	Lf	a	Q	q
	mm	mm	mm	mm	mm	°	KN	kg/m
A0	18.75	3	19.5	9.5	24	15	9	1
A1	19	3	25.6	10.7	30.5	15	12	1.41
A1-2	25	3	30.1	13.5	37.8	15	21	2.23
A3	28.6	3	35.3	16	44.2	15	38.5	3.04
A4	36	4	48.5	20.5	58.5	15	61.5	5.54
A5	36	4	60.5	20.5	70	15	71	5.54
A6	44	5.4	70	24	77	15	12.5	9
L0	15.2	2.8	25.2	9	30.6	15	10	1.24
L2	20.1	3	28	12.7	37.5	15	21	1.97

滚珠式无极变速链
Roller type infinitely variable speed chains

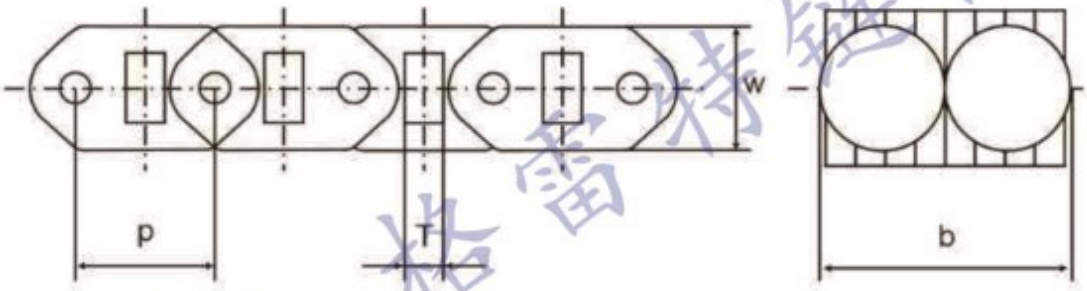

天地链号	节距 Pitch	链板高度 Plate depth	滚珠宽度 Roller width	滚珠厚度 Roller thickness
	P	W	b	T
	mm	mm	mm	mm
PSR0	10.1	9.2	12	2.9
PSR1	12	12	16	4
PSR4	13.3	17.7	25	4.9
PSR5	14	20.5	31	5.3
PSR6	16.2	22.5	31	5.3

与C208B配套

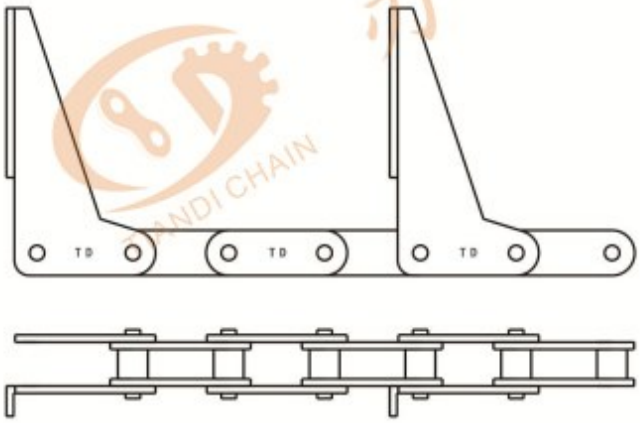

与08B配套

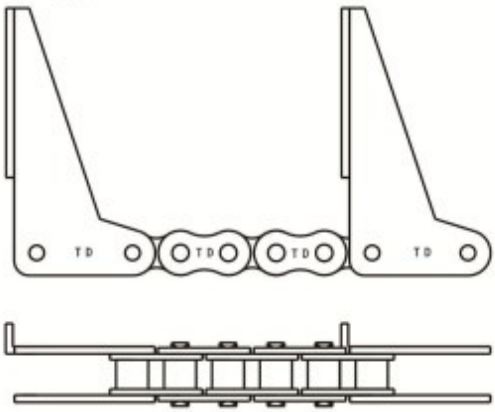

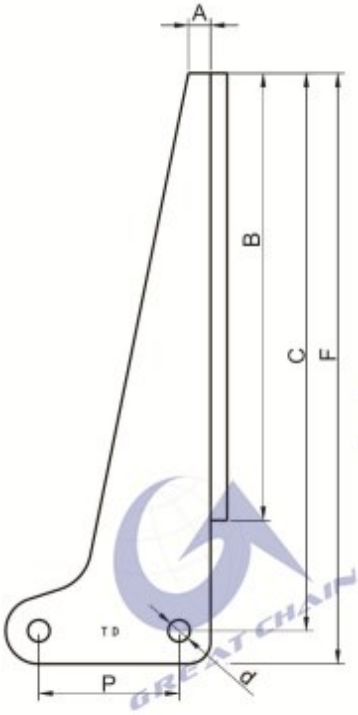

天地型号	节距 Pitch	销轴直径 Pin diameter	附板尺寸 attachment size				
Chain No.	P	d max	A	B	C	F	H
	mm	mm	mm	mm	mm	mm	mm
C208B	25.4	4.45	3	81.5	102	107.6	7.2
P28.5	28.5	3.28	2	55	65.9	70	5
P38.1	38.1	4.45	4	117	124.2	130.3	8

重载弯板链
Heavy duty cranked-link chains

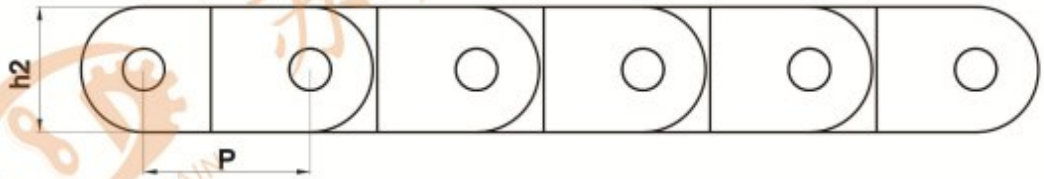

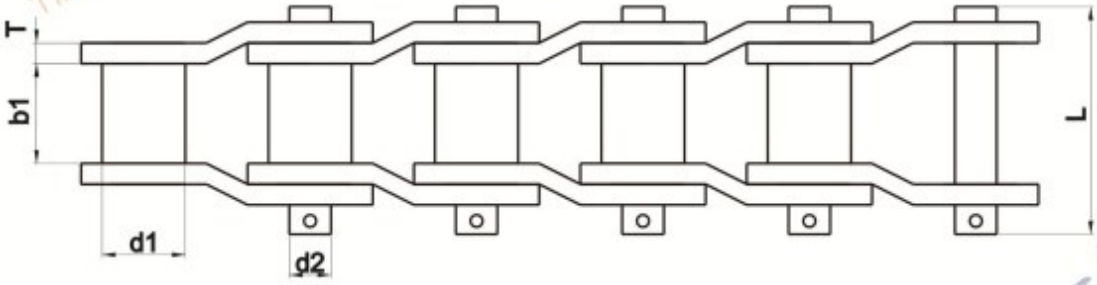

天地链号	节距 Pitch	滚柱直径 Roller diameter	内节内宽 Width between inner plates	销轴直径 Pin diameter	销轴长度 Pin length	链片宽度 Plate depth	链板厚度 Plate thickness	极限抗拉强度 Ultimate tensile strength	平均抗拉强度 Average tensile strength	每米重量 Weight per meter
Chain No.	P	d1 max	b1 min	d2 max	L max	h2 max	t/T max	Q min	Q0	q
	mm	mm	mm	mm	mm	mm	mm	kN/lbf	kN	kg/m
2010	63.5	31.75	38.1	15.9	89	47.8	7.9	250/56818	270	13.53
2510	78.1	31.75	36.9	16	94.8	40	8	271/61590	292.6	10.72
2510H	78.1	31.75	36.9	16.5	95.3	45	9.5	280.4/63727	302.8	12.7
2512	77.9	41.28	39.6	19.05	100	57	9.7	340/77272	367.2	18.4
2814	88.9	44.45	36.6	22.23	117.6	58	12.7	471/105955	507.6	25.7
3214	103.2	44.45	48	22	123.5	55	13	476/108180	514	23.6
3315	103.45	45.24	49.3	23.85	130	63.5	14.2	550/125000	594	27.71
3618	114.3	57.15	52.3	27.97	138	79.2	14.2	760/172727	820.8	41.2
4020	127	63.5	69.9	31.78	165.7	88.9	15.7	987/224300	1069.2	48.6
2184	152.4	76.2	35	22.2	96	51	9.5	330/75000	378	18.17
MXS882	66.27	22.23	28.58	11.1	68.5	28.5	6.4	115.6/26272	124.8	5.3
MXS3075	78.1	31.75	38.1	16.46	93.5	44.5	9.7	334/75909	360.7	13.45
MXS1242	103.2	44.45	49.2	22.23	124.5	57	12.8	623/141591	672.8	24.63
SS588	66.27	22.23	28.6	11.11	63.7	28.6	6.4	130/29545	144	5.46
SS568H	77.9	41.3	39.7	19.05	97.6	57	9.5	340/77272	367.2	19.8
SS40H	78.11	31.75	38.1	15.88	97	41.5	9.5	250/56818	280	12.6
SS124	103.2	44.45	49.2	22.23	127.2	57	12.7	560/127272	590	22.57
SS1245	103.45	45.2	49.6	23.8	129.4	60	14.5	550/125000	605	31.19
SS635H	114.3	57.2	52.4	27.94	137	76.2	14.5	760/172727	836	37.8

钢制方框易拆链
Steel detachable chain

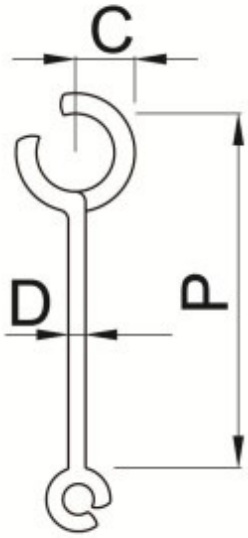

天地链号	链号	节距 Pitch	参数尺寸（英寸） Dimensions in inches				抗拉强度 Min tensile strength	10英尺节数 Links in 10ft
Chain No.	Chain NO.	P	A	B	C	D		
SDC25	25	0.904	0.422	0.703	0.18	0.073	760	133
SDC32	32	1.157	0.594	0.938	0.23	0.09	1320	104
SDC32W	32W	1.157	0.594	1.063	0.232	0.095	1320	104
SDC42	42	1.375	0.781	1.219	0.265	0.105	1680	87
SDC50H	50H	1.375	0.781	1.281	0.28	0.125	2240	87
SDC51	51	1.133	0.703	1.094	0.233	0.1	1680	106
SDC52	52	1.508	0.844	1.406	0.303	0.12	2160	80
SDC55	55	1.63	0.796	1.281	0.32	0.125	2240	74
SDC62	62	1.654	0.984	1.563	0.335	0.148	3520	73
SDC62H	62H	1.654	0.984	1.875	0.342	0.155	3600	73
SDC67H	67H	2.313	1.093	1.875	0.448	0.185	4400	52
SDC67W	67W	2.313	1.093	2.375	0.428	0.155	3800	52
SDC67XH	67XH	2.313	1.093	1.875	0.463	0.2	5500	52
SDCS	S	2.906	1.093	1.938	0.518	0.17	3840	41

S型钢制农机链
S type steel agricultural chains

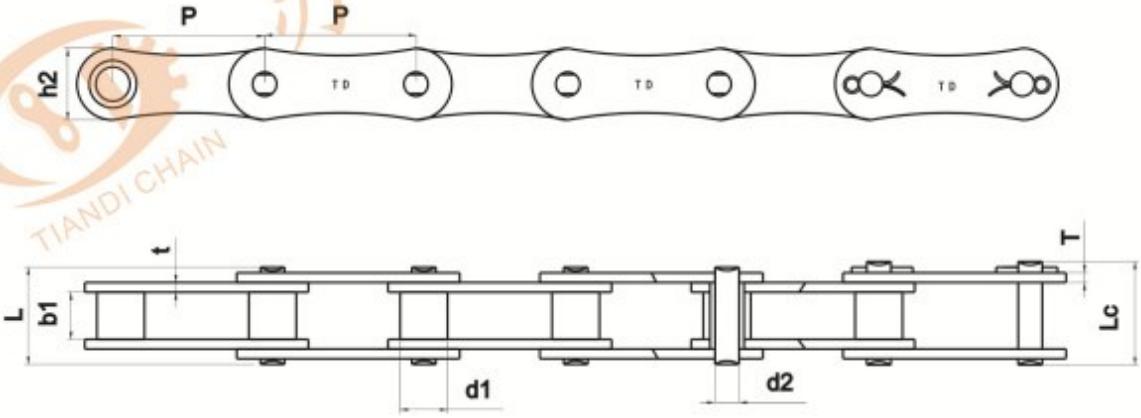

天地链号	节距 Pitch	滚柱直径 Roller diameter	内节内宽 Width between inner plates	销轴直径 Pin diameter	销轴长度 Pin length		内片宽度 Inner plate depth	链板厚度 Plate thickness	极限抗拉强度 Ultimate tensile strength	平均抗拉强度 Average tensile strength	每米重量 Weight per meter
Chain No.	P	d1 max	b1 min	d2 max	L max	Lc max	h2 max	t/T max	Q min	Q0	q
	mm	mm	mm	mm	mm	mm	mm	mm	kN/Ibf	kN	kg/m
S32	29.21	11.43	15.88	4.45	26.7	28.8	13.2	1.8	8/1818	21.6	0.86
S42	34.93	14.27	19.05	7	34.3	37	19.8	2.8	27/6136	50.8	1.6
S45	41.4	15.24	22.23	5.72	37.7	40.4	17.3	2.8	18/4091	36.1	1.66
S51	38.1	15.24	16	5.72	30.9	33.8	17.3	2.8	28/6364	30.8	1.48
S52	38.1	15.24	22.23	5.72	37.7	40.4	17.3	2.8	18/4091	36.1	1.68
S55	41.4	17.78	22.23	5.72	37.7	40.4	17.3	2.8	18/4091	36.1	1.8
S62	41.91	19.05	26.2	5.72	40.3	43	17.3	2.5	26.7/6067	36.1	2.07
S77	58.34	18.26	22.23	8.9	43.2	46.4	26.2	4	45/10227	73.1	2.66
S88	66.27	22.86	28.58	8.9	49.8	53	26.2	4	45/10227	73.1	3.25
CA642	41.4	15.88	19	8.28	36.1	39.1	21.2	3	50/11363	55	1.98
CA650	50.8	25	18.9	9.53	40.4	44.7	25	4	90/20454	95.5	3.49

S型钢制农机链附件
S type steel agricultural chain with attachments

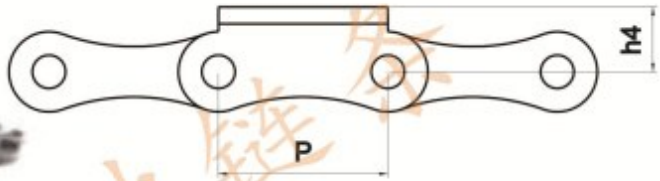

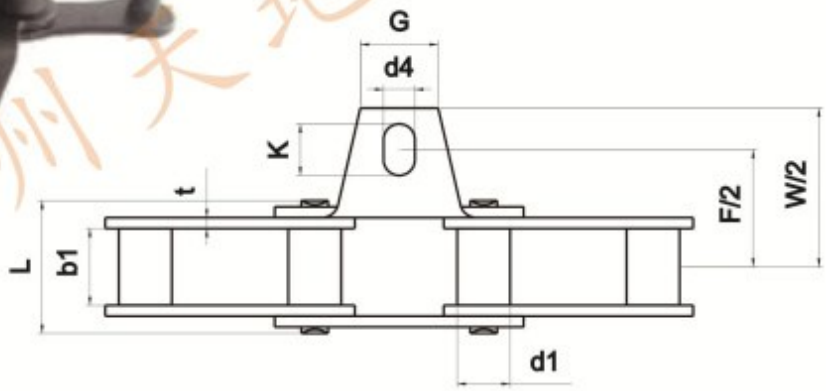

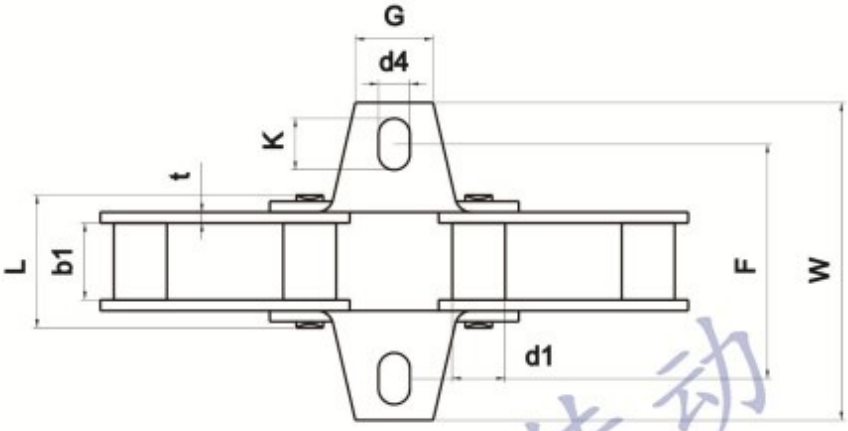

天地链号 Chain No.	P	b1	G	F	W	h4	d4	K
	mm	mm	mm	mm	mm	mm	mm	mm
S32	29.21	15.88	15	42.9	61	8.6	5.3	6.9
S42	34.93	19.05	17.5	54	74.9	14	8.3	11.5
S45	41.4	22.23	22	54	75	11.4	8.5	11.7
S51	38.1	16	19	49.8	71.5	11.4	8.3	9.9
S52	38.1	22.23	19	58.8	78	11.4	8.3	9.9
S55	41.4	22.23	22	54	75	11.4	8.5	11.7
S62	41.91	26.2	22	66.8	95.4	11.4	8.3	14.7
S77	58.34	22.23	25	76.2	102	20.8	8.3	11.5
S88	66.27	28.58	22	97	119.4	20.8	8.3	9.9

A型、CA型钢制农机链
A type、CA type steel agricultural chains

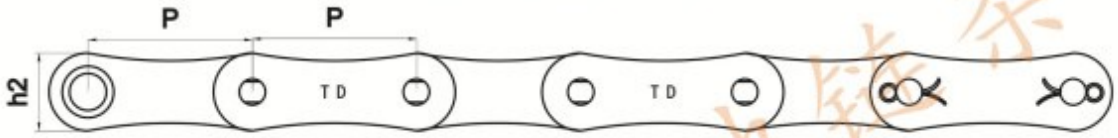

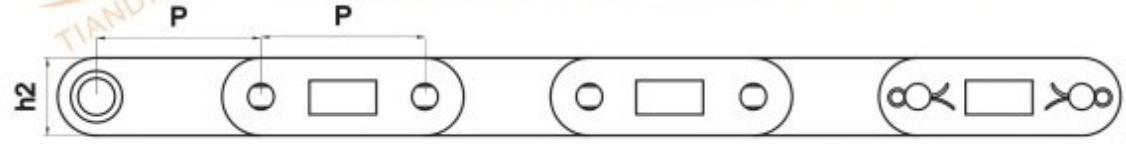

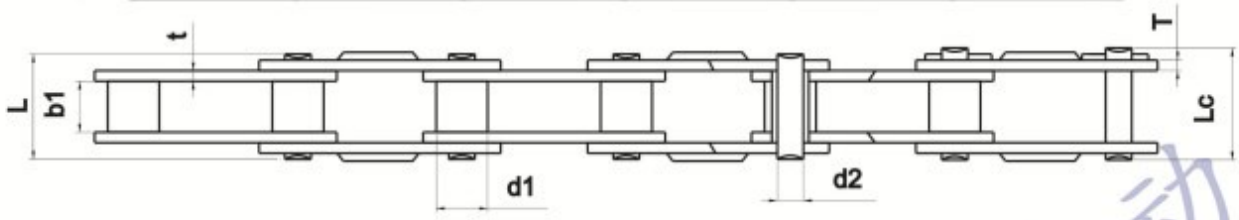

天地链号	节距 Pitch	滚柱直径 Roller diameter	内节内宽 Width between inner plates	销轴直径 Pin diameter	销轴长度 Pin length		内片宽度 Inner plate depth	链板厚度 Plate thickness	极限抗拉强度 Ultimate tensile strength	平均抗拉强度 Average tensile strength	每米重量 Weight per meter
Chain No.	P	d1 max	b1 min	d2 max	L max	Lc max	h2 max	t/T max	Q min	Q0	q
	mm	mm	mm	mm	mm	mm	mm	mm	kN/Ibf	kN	kg/m
A550	41.4	16.87	19.81	7.19	35	38	19.3	2.8	39.1/8886	51.2	1.79
A555	41.4	16.87	12.7	7.19	29.1	32	19.3	3.1	39.1/8886	56	1.6
A557	41.4	17.78	20.24	8	37.4	40.6	23.1	3.1	55.61/12639	74.3	2.45
A620	42.01	17.91	24.51	7.19	41.8	45.2	20.2	3.25	39.1/8886	55.1	2.18
CA550	41.4	16.87	19.81	7.19	35	38	19.3	2.8	39.1/8886	51.2	1.94
CA555	41.4	16.87	12.7	7.19	29.1	32	19.3	3.1	39.1/8886	56	1.72
CA557	41.4	17.78	20.4	8	37.4	40.6	23.1	3.1	55.61/12639	74.3	2.6
CA620	42.01	17.91	24.51	7.19	41.8	45.2	20.2	3.25	39.1/8886	55.1	2.35
CA550H	41.4	16.74	20	7.14	36	39.1	19.1	3	57.82/13000	60.8	2
CA627	30	15.88	19.05	8.28	36.1	39.4	20.5	3	50/11247	55	2.51
CA550D	41.4	16.87	19.81	7.19	35	38	19.3	2.8	39.1/8886	51.2	1.94
CA555D	41.4	16.87	12.7	7.19	29.1	32	19.3	3.1	39.1/8886	56	1.72
CA557D	41.4	17.78	20.4	8	37.4	40.6	23.1	3.1	55.61/12639	74.3	2.6
CA620D	42.01	17.91	24.51	7.19	41.8	45.2	20.2	3.25	39.1/8886	55.1	2.35

Ca型钢制农机链附件
CA type steel agricultural chain with attachments

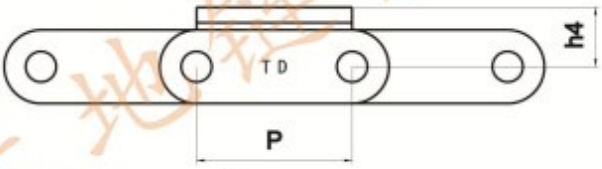

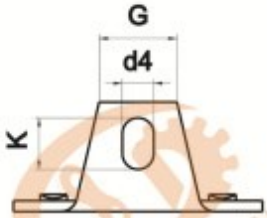

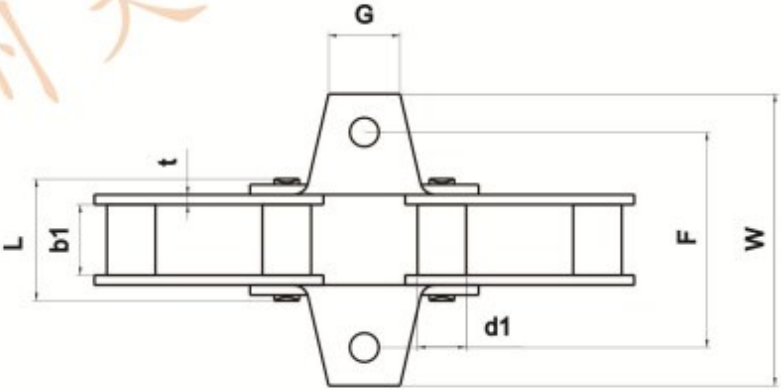

天地链号 Chain No.	P	b1	G	F	W	h4	d4	K
	mm	mm	mm	mm	mm	mm	mm	mm
CA550	41.4	19.81	22	52.5	76.2	12.7	8.3	10
CA555	41.4	12.7	22	52.5	76.2	12.7	8.3	10
CA557	41.4	20.24	22	50.8	72	15.9	8.7	-

天地链条
TD CHAIN

M系列输送链
Conveyor chains (M series)

1. 无滚珠
1. without rollers

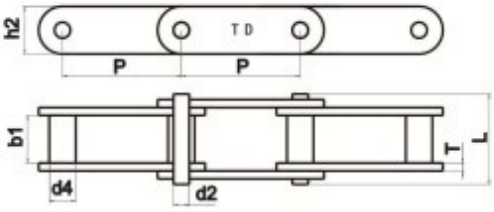

2. 带S型小滚珠
2. with S type small rollers

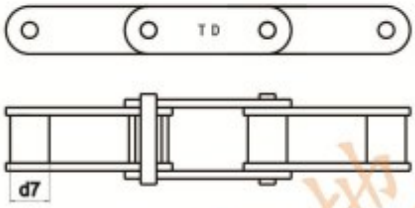

3. 带P型大滚珠
3. with P type large rollers

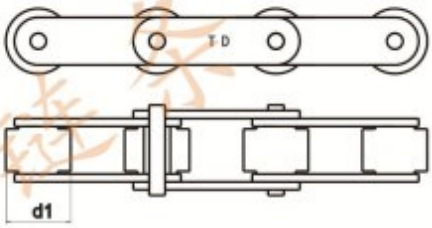

4. 带F型花边滚珠
4. with F type flanged rollers

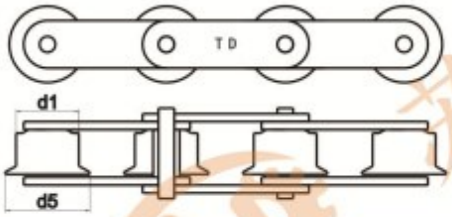

5. 销轴铆头后采用焊接加固
5. welded pins with plates

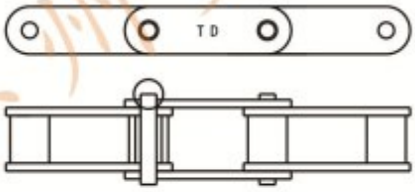

天地链号	节距 Pitch							滚柱直径 Roller diameter			套筒直径 Bush diameter
Chain No.	P							d1 max			d4
	mm							mm			mm
M20	40	50	63	80	100	125	160	25	12.5	30	9
M28	50	63	80	100	125	160	200	30	15	36	10
M40	63	80	100	125	160	200	250	36	18	42	12.5
M56	63	80	100	125	160	200	250	42	21	50	15
M80	80	100	125	160	200	250	315	50	25	60	18
M112	80	100	125	160	200	250	315	60	30	70	21
M160	100	125	160	200	250	315	400	70	36	85	25
M224	125	160	200	250	315	400	500	85	42	100	30
M315	160	200	250	315	400	500	630	100	50	120	36
M450	200	250	315	400	500	630	800	120	60	140	42

天地链号	内节内宽 Width between inner plates	销轴直径 Pin diameter	销轴长度 Pin length	内片宽度 Inner plate depth	链板厚度 Plate thickness	极限抗拉强度 Ultimate tensile strength	平均抗拉强度 Average tensile strength
Chain No.	b1 min	d2 max	L max	h2 max	t/T max	Q min	Q0
	mm	mm	mm	mm	mm	kN/Ibf	kN
M20	16	6	35	18	2.5	20/4545	25
M28	18	7	40	20	3	28/6364	35
M40	20	8.5	45	25	3.5	40/9091	50
M56	24	10	52	30	4	56/12727	70
M80	28	12	62	35	5	80/18182	100
M112	32	15	73	40	6	112/25454	140
M160	37	18	85	50	7	160/36364	200
M224	43	21	98	60	8	224/50909	280
M315	48	25	112	70	10	315/71591	393.7
M450	56	30	135	80	12	450/102272	562.5

04C-F1

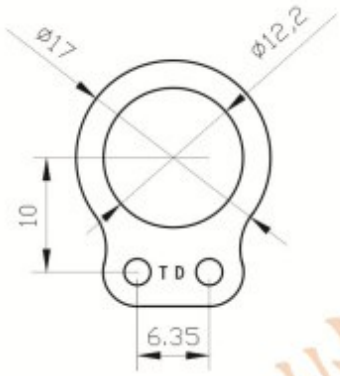

05B-F1

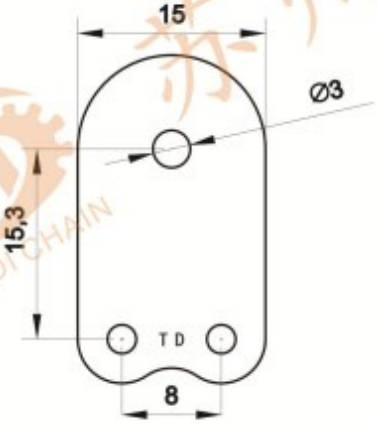

06B-F1

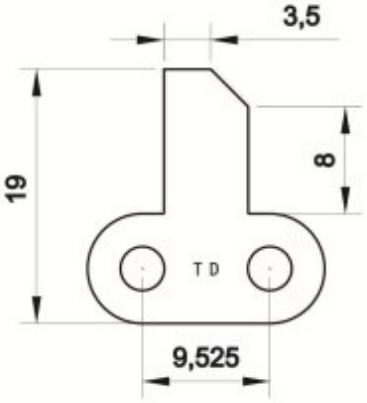

06B-F2

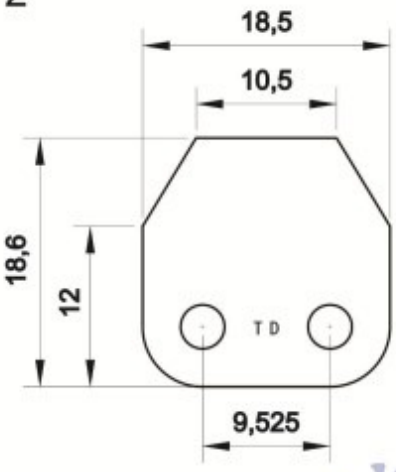

06B-F3

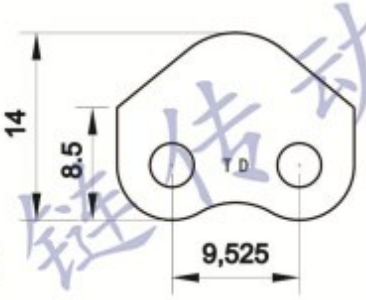

06B-F4 硅胶

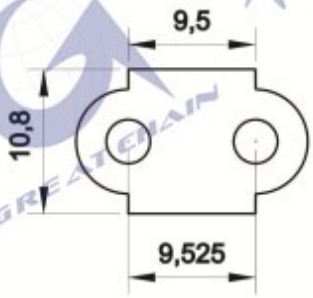

06B-F5

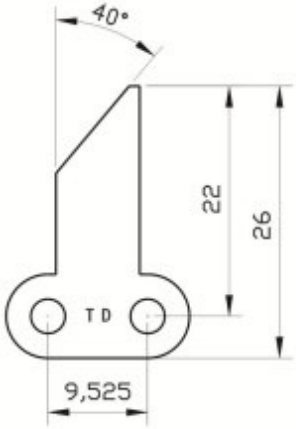

带附件输送链
Conveyor chains with attachments

06B-F6

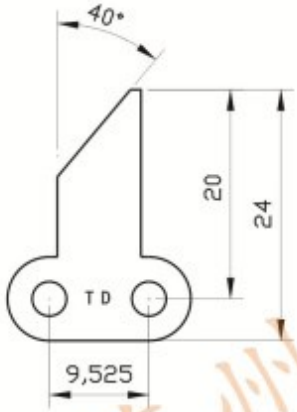

06B-F7

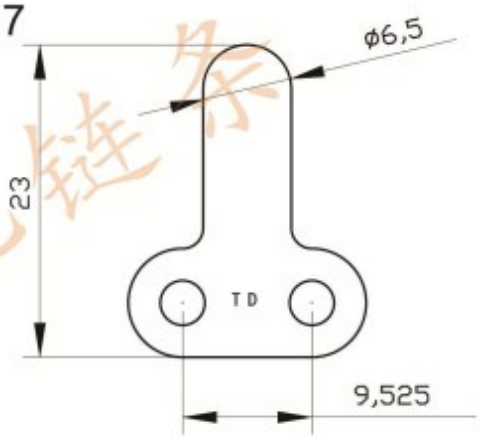

06B-F8

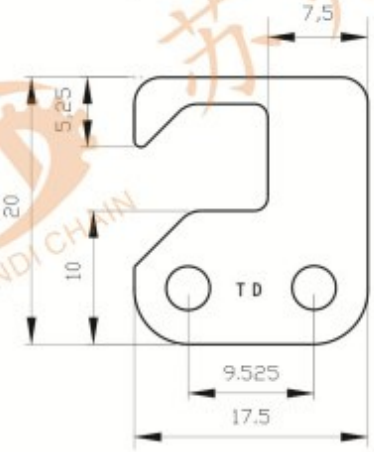

06C-F1

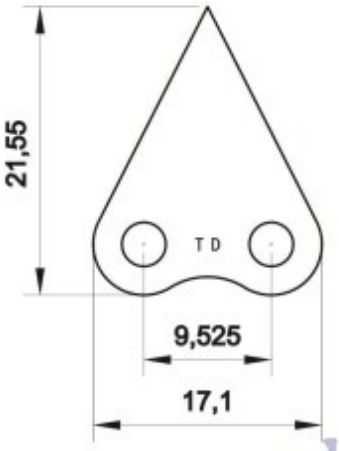

06C-F2

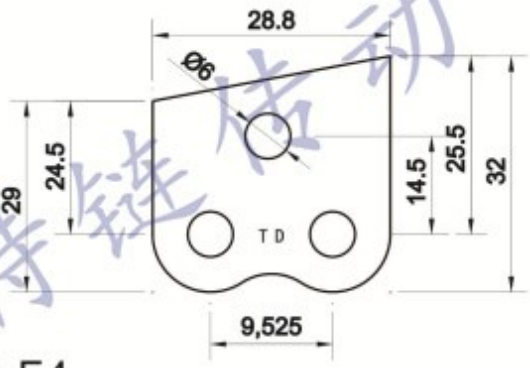

06C-F3

06C-F4

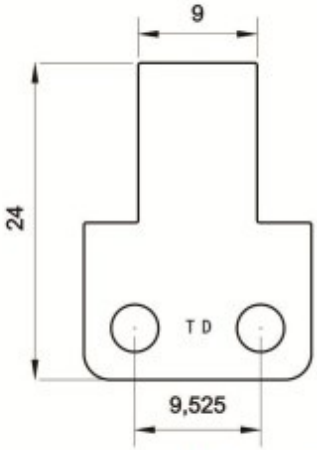

08A-F1

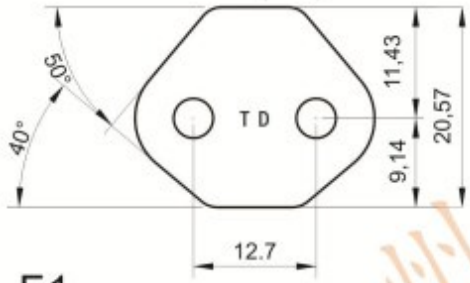

08A-F2

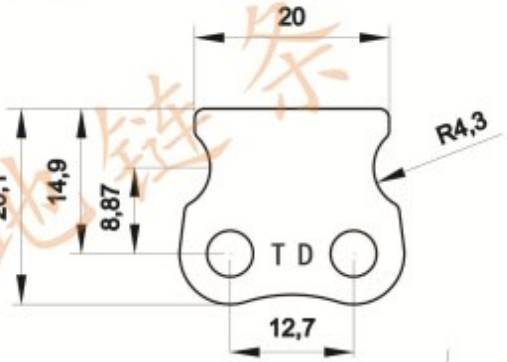

08B-F1

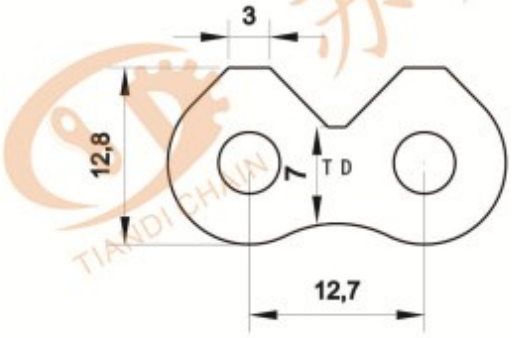

08B-F2

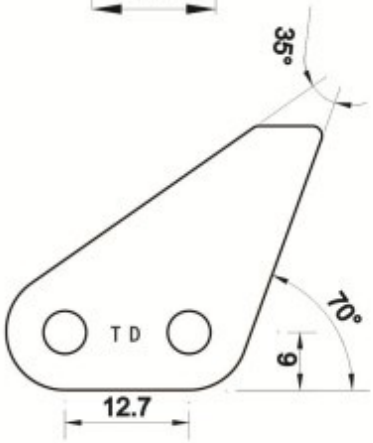

08B-F3

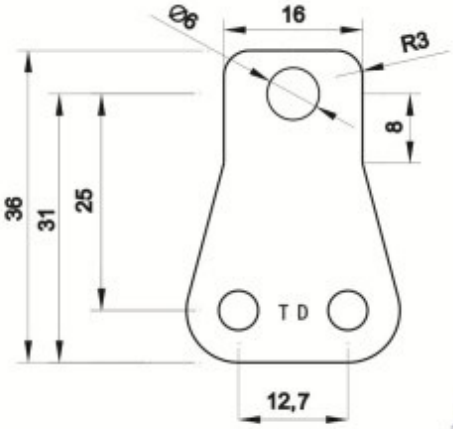

08B-F4

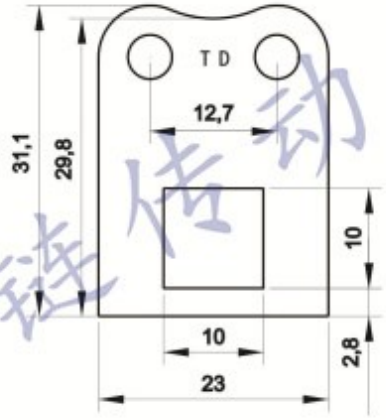

08B-F5

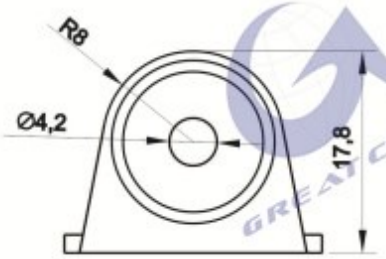

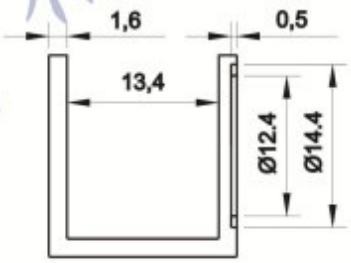

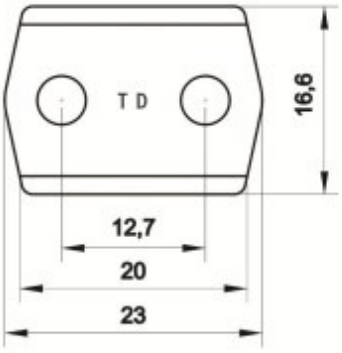

带附件输送链
Conveyor chains with attachments

08B-F6

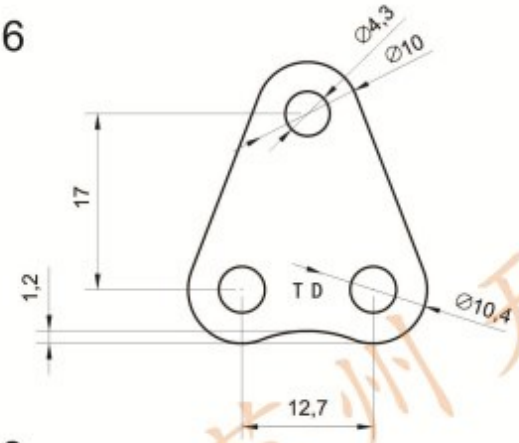

08B-F8

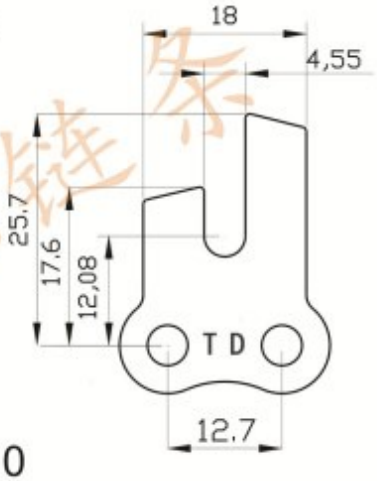

08B-F9

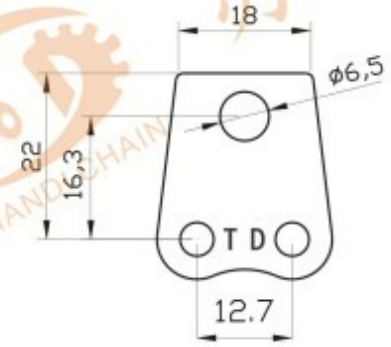

08B-F10

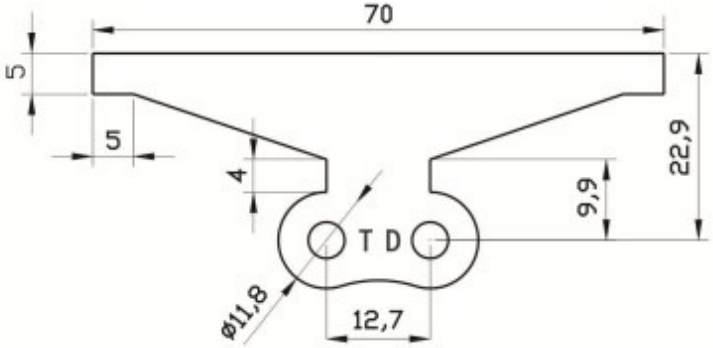

08B-F11

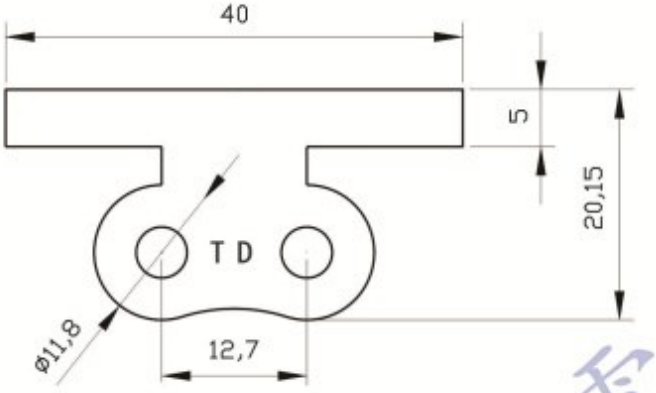

08B-F12

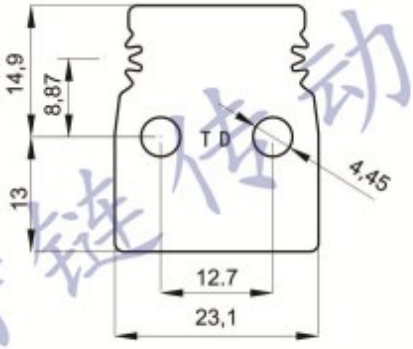

08B-F13

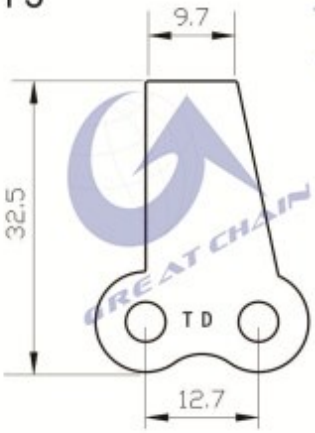

08B-F14

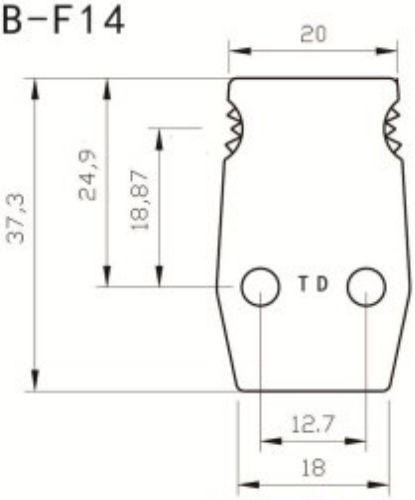

08B-F15

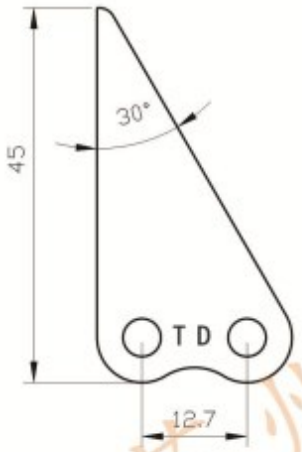

08B-F16

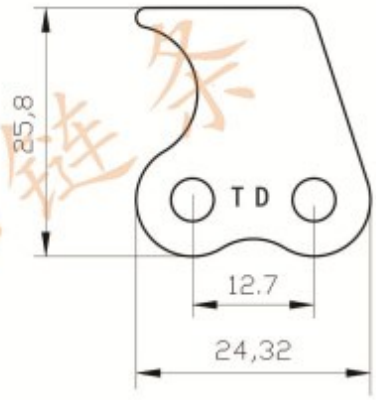

10A-F1

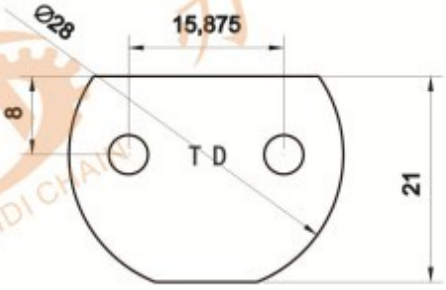

10A-F2

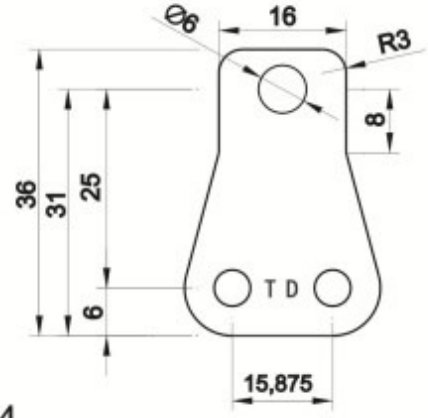

10A-F3

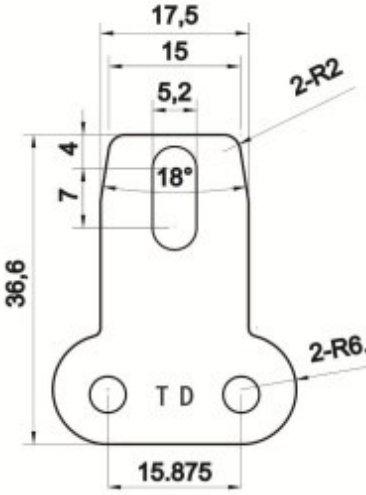

10A-F4

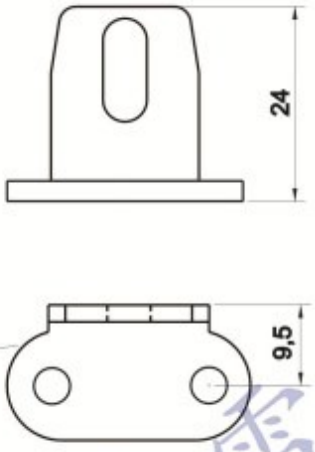

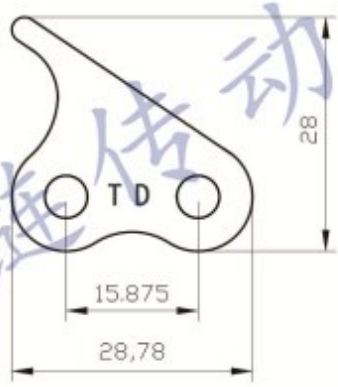

10A-F5

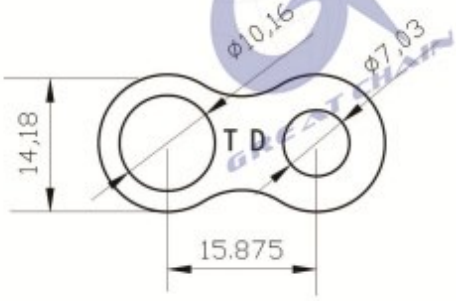

10A-F6

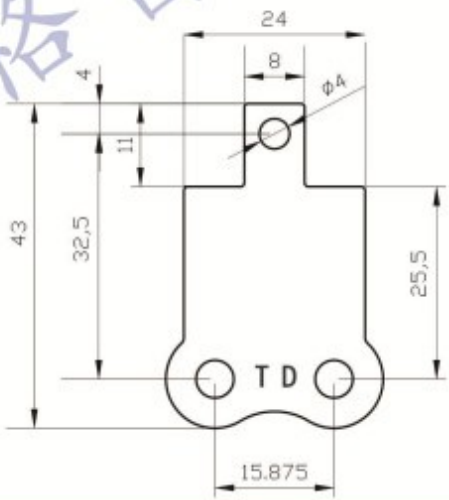

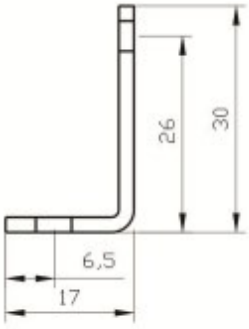

带附件输送链
Conveyor chains with attachments

12A-F1

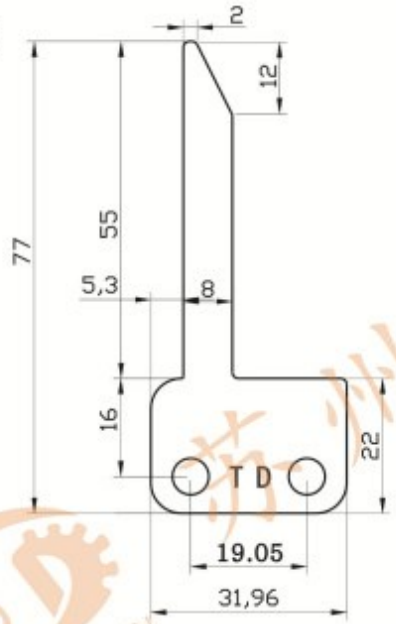

12A-F2

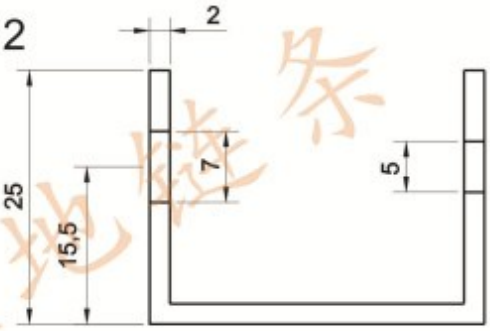

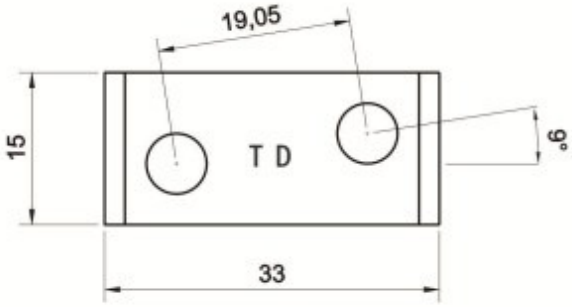

12A-F3

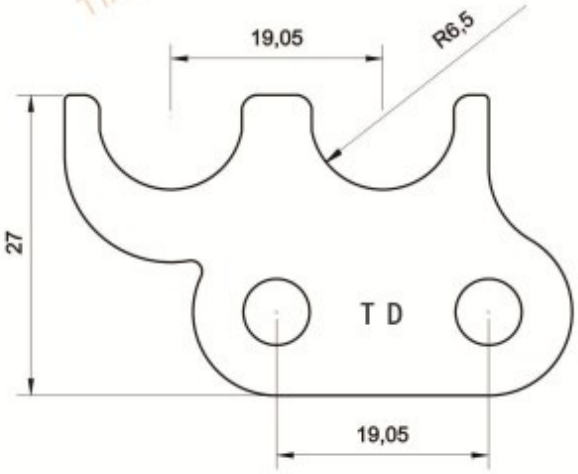

带附件输送链
Conveyor chains with attachments

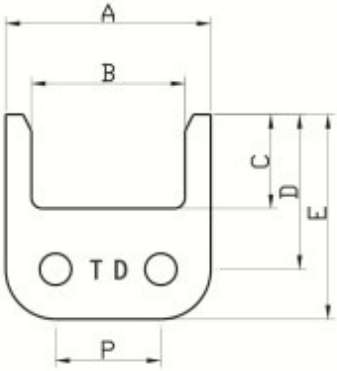

type A

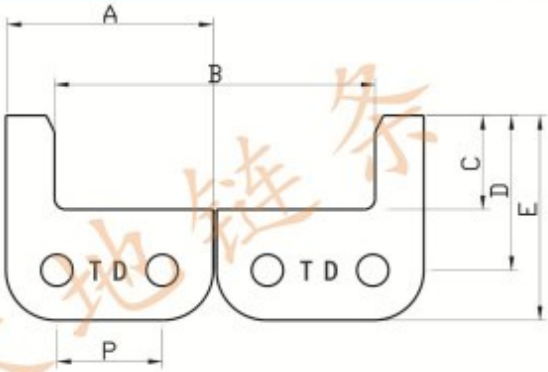

type B

天地链号	节距 Pitch	A	B	C	D	E	Type
NO.	mm	mm	mm	mm	mm	mm	
08B-F7	12.7	23.92	14.9	20	28.35	34	A
12B-F1	19.05	37	27.4	16.5	27.7	36.5	A
12B-F2	19.05	37.5	58	17	28	37	B
12B-F3	19.05	37.5	42	17	28	37	B
12B-F4	19.05	37.6	27.9	18	29	38.3	A
12B-F5	19.05	37.6	32.3	18	29	38.3	A
12B-F6	19.05	37.6	66	19	30	39	B

16A-F1

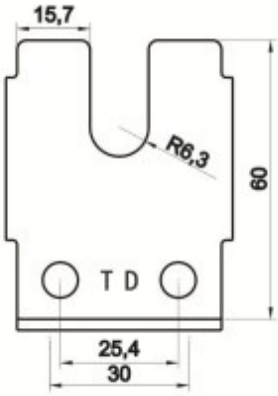

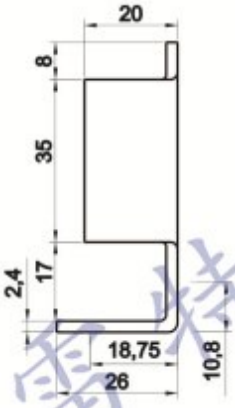

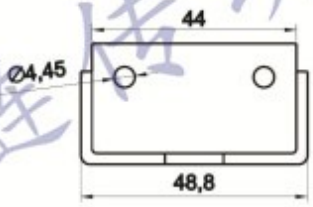

16A-F2

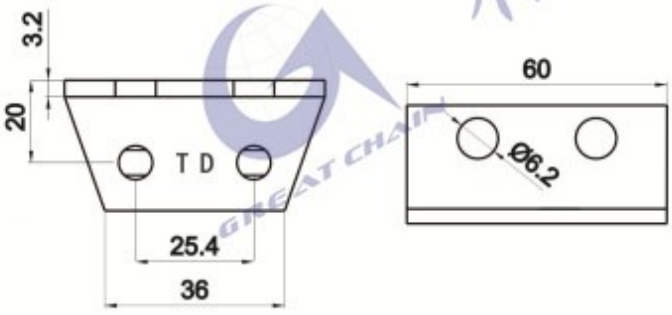

16A-F3

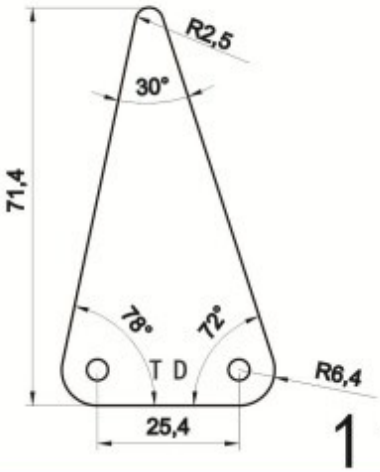

带附件输送链
Conveyor chains with attachments

20A-F1

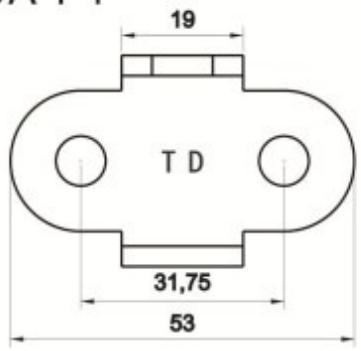

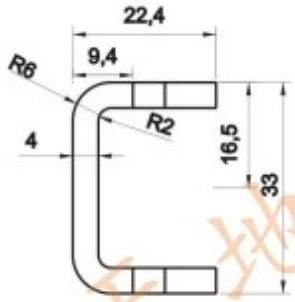

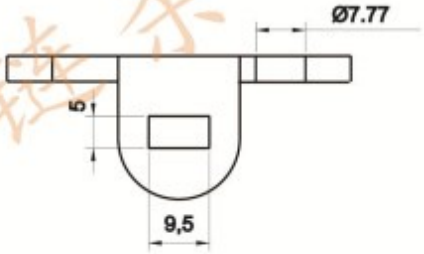

24A-F1

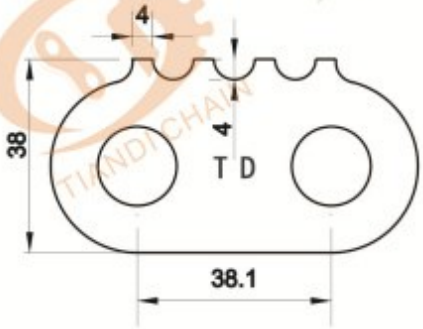

24A-F2

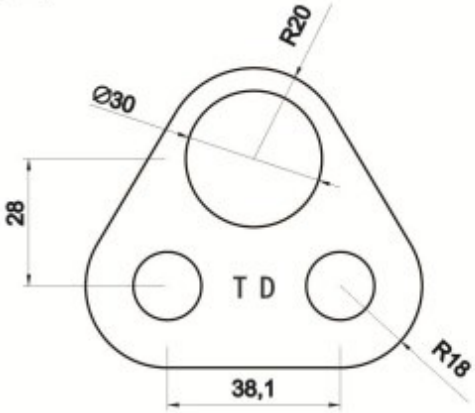

24A-F3

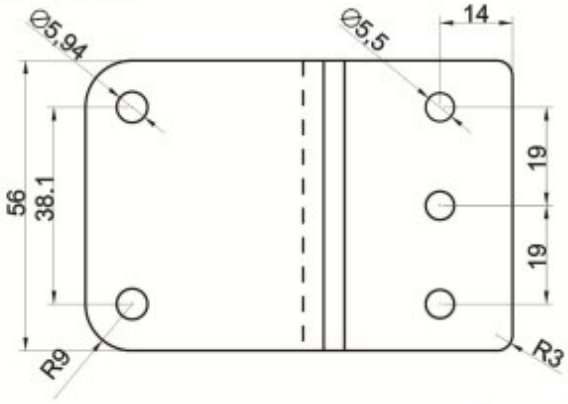

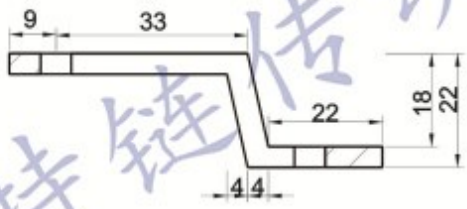

40A-F1

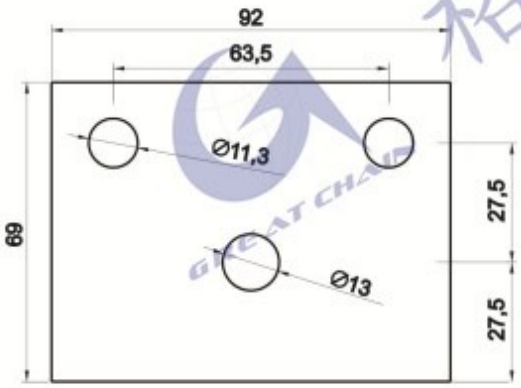

2040-F1

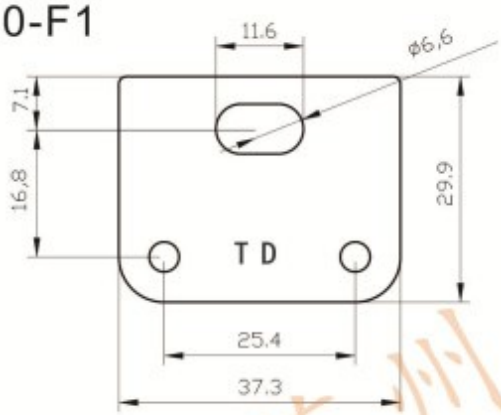

2050-F1

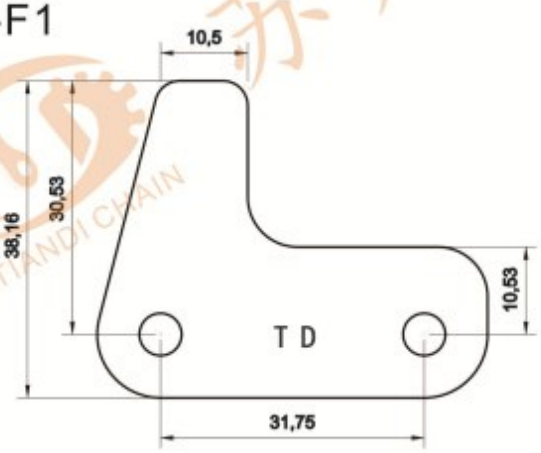

2080-F1

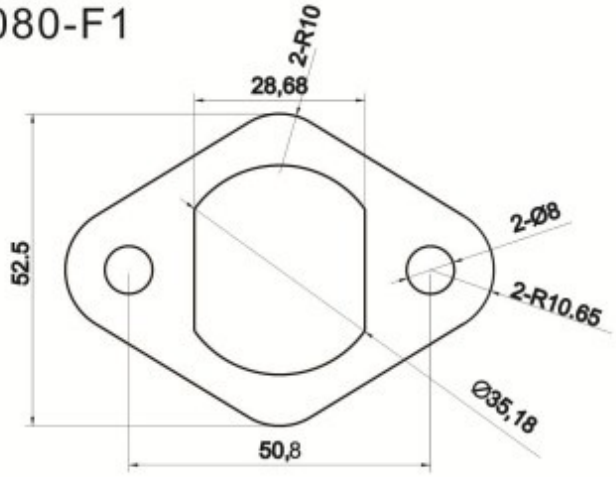

带附件输送链
Conveyor chains with attachments

P40-F3

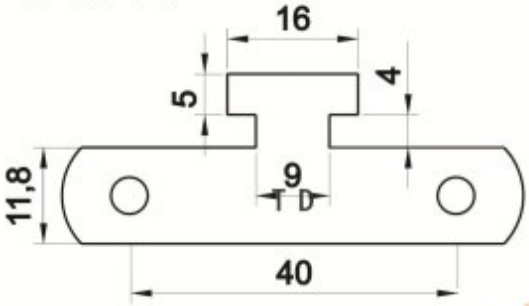

P40-F2

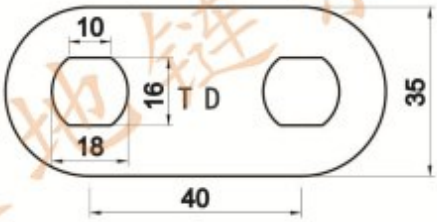

P50-F2

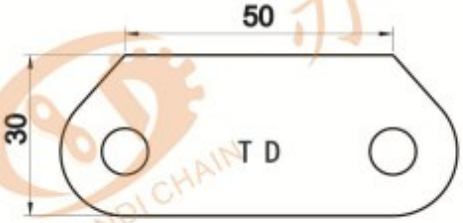

P75

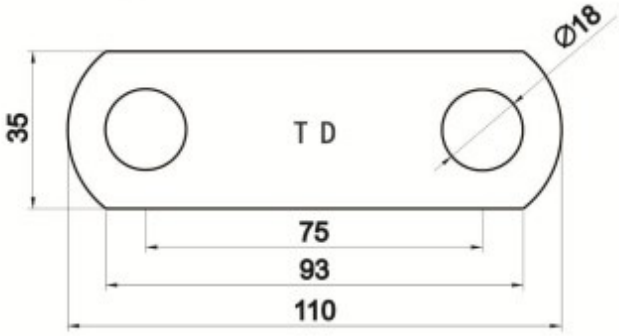

P80

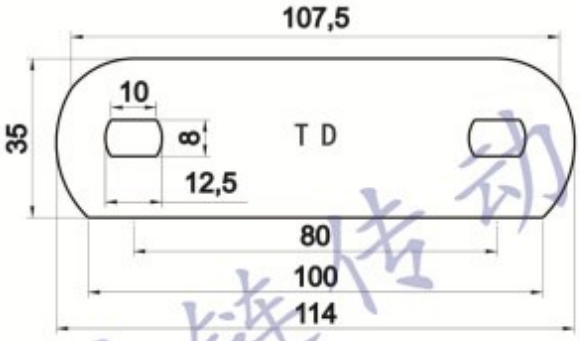

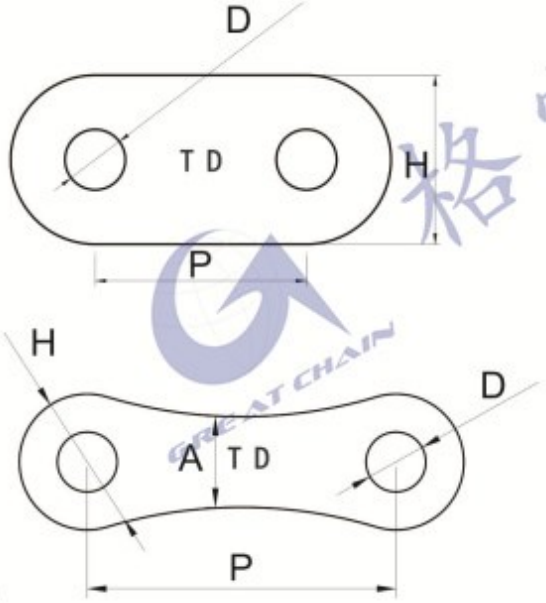

天地链号	P	H	D	A
NO.	mm	mm	mm	mm
P10.16	10.16	8	3.96	6
P15.24	15.24	9.5	5.6	7
P15	15	7	2.31	-
P25	25	11.8	3.94	10
P27.5	27.5	16	5.94	-
P35	35	22	7.2	-
P40-F1	40	35	11.8	-
P41	41	18	7.92	12
P50-F1	50	40	14.8	-
P60	60	19.24	7.2	-
P63	63	27.9	11.2	15.5
P68	68	26	7.92	-

联系我们

Contact

天地链条 TD CHAIN

官网：www. tdchain. com

天地APP

GREAT CHAIN

官网：www. great-chains.com

阿里巴巴·中国 alibaba.com.cn

Alibaba.com

慧聪网 HC360.com

Made-in-China.com™ 中国制造网

淘宝网 Taobao.com

天地五金传动

传动链条工厂店

格雷特机械传动配件厂

苏州格雷特链传动

speciality
专业成就品质。
character

地址：江苏省苏州市吴中区横泾镇新思路11号
Add:NO.11,XINSI ROAD,HENGJING,WUZHONG DISTRICT,SUZHOU
电话(TEL)：0512-69171380-801
传真(FAX)：0512-65938177
网址(WEB)：www.tdchain.com　　www.great-chains.com
邮箱(E-MAIL)：hank@tdchain.com
ava@great-chains.com
rose@great-chains.com